Grill cabin 25 m² with extension

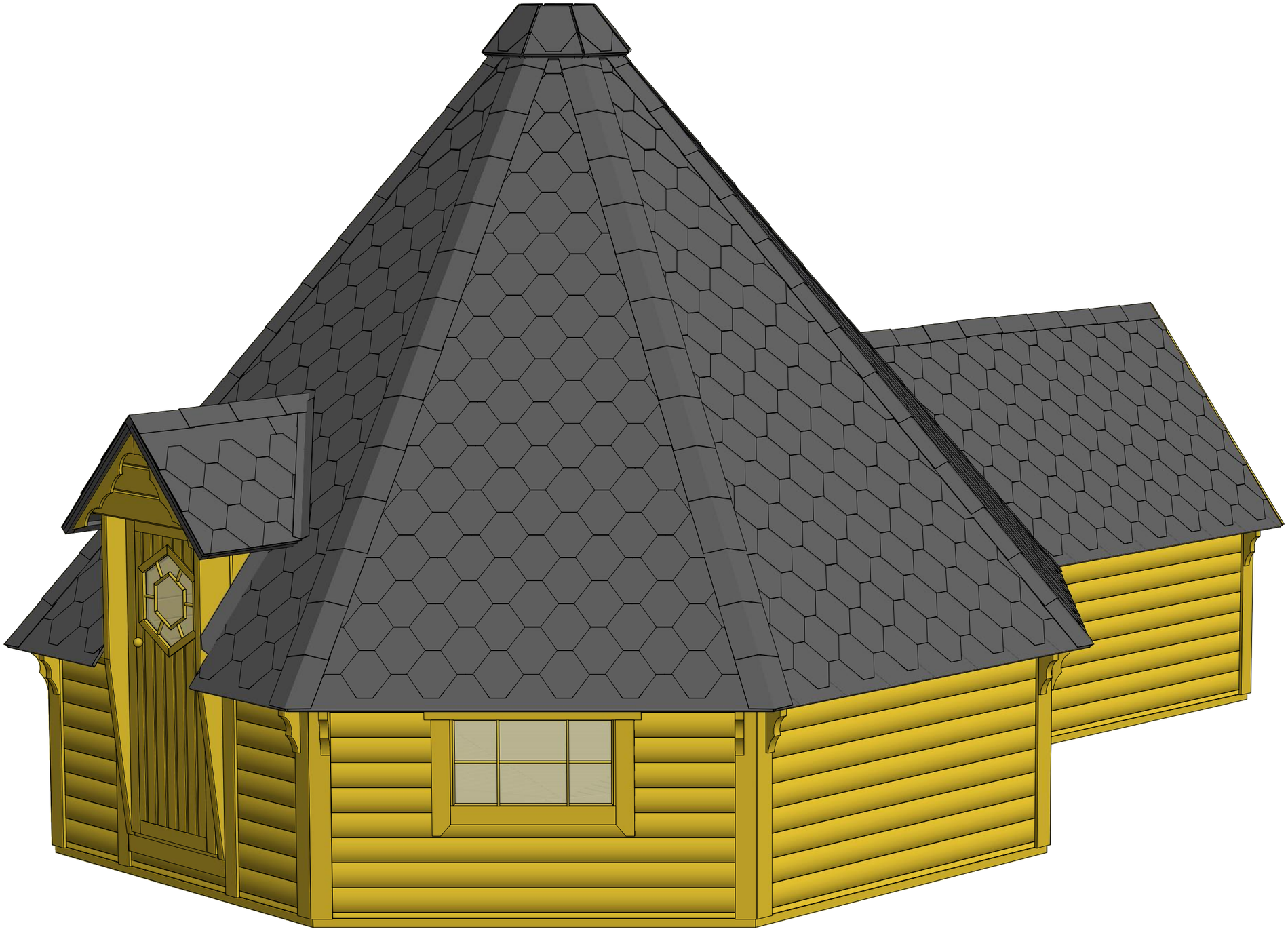

Grill cabin 25 m² with extension

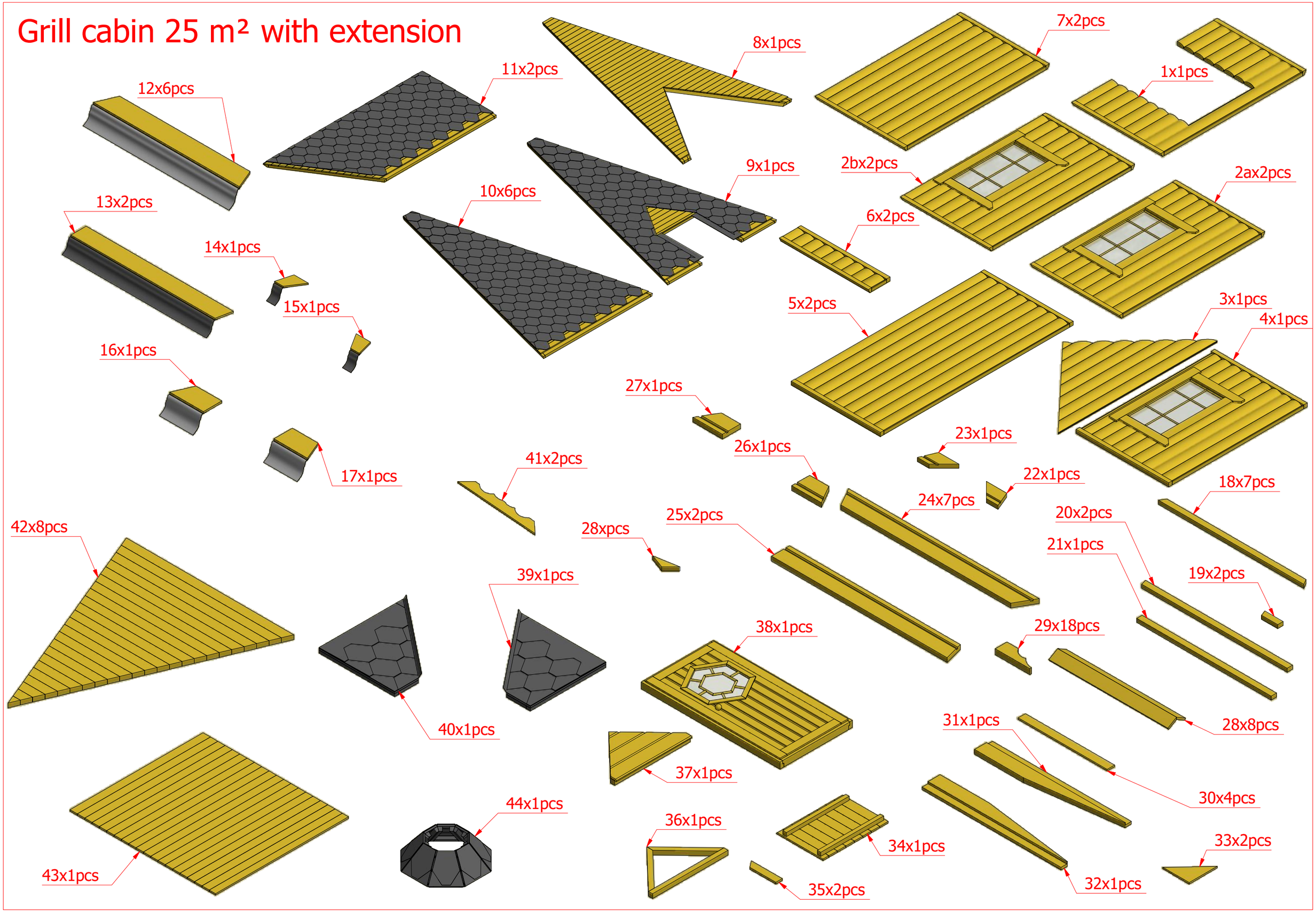

Grill cabin 25 m² with extension

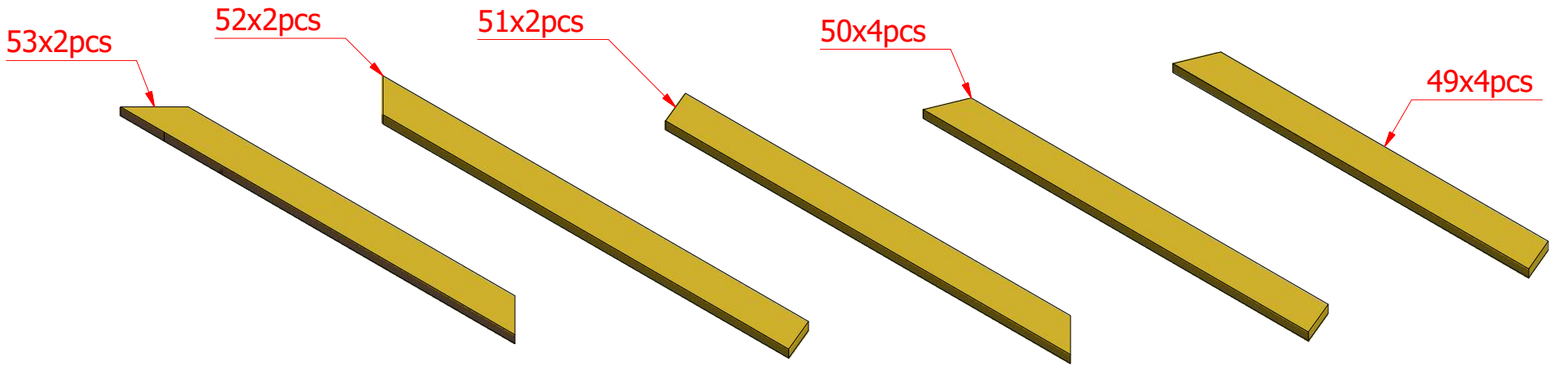

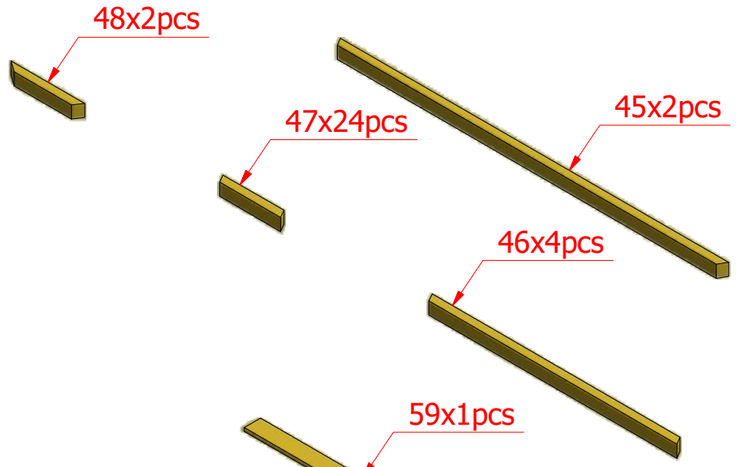

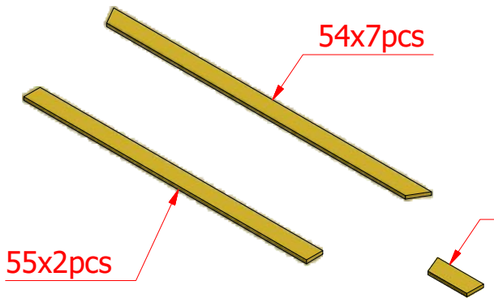

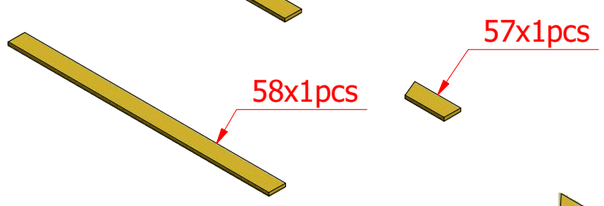



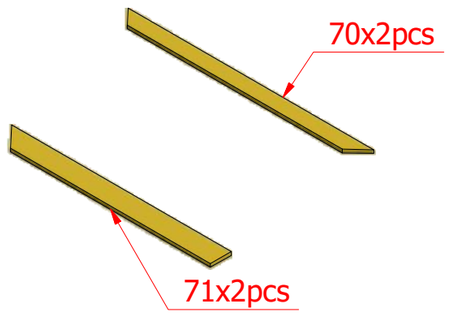

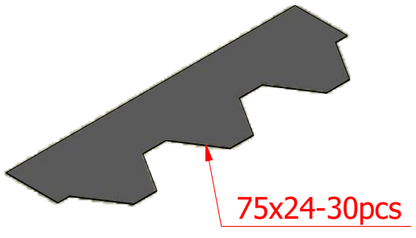

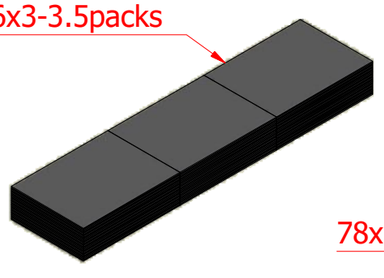

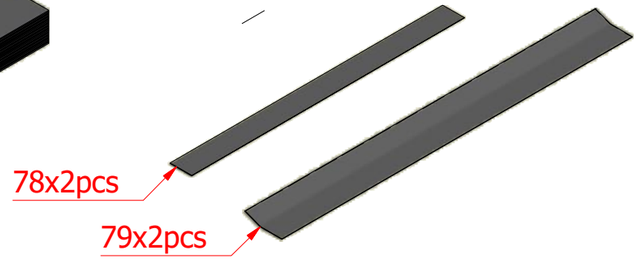



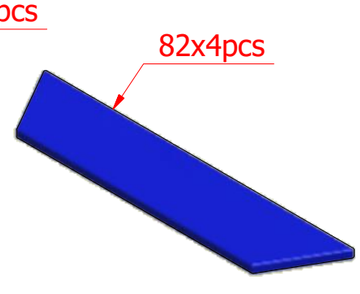

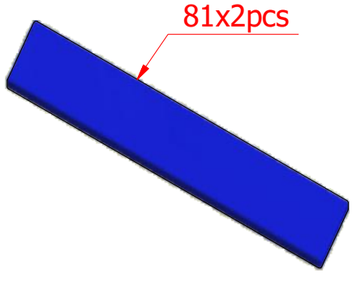

Grill cabin 25 m² with extension

Screws			
1	S1	5x100	24 pcs

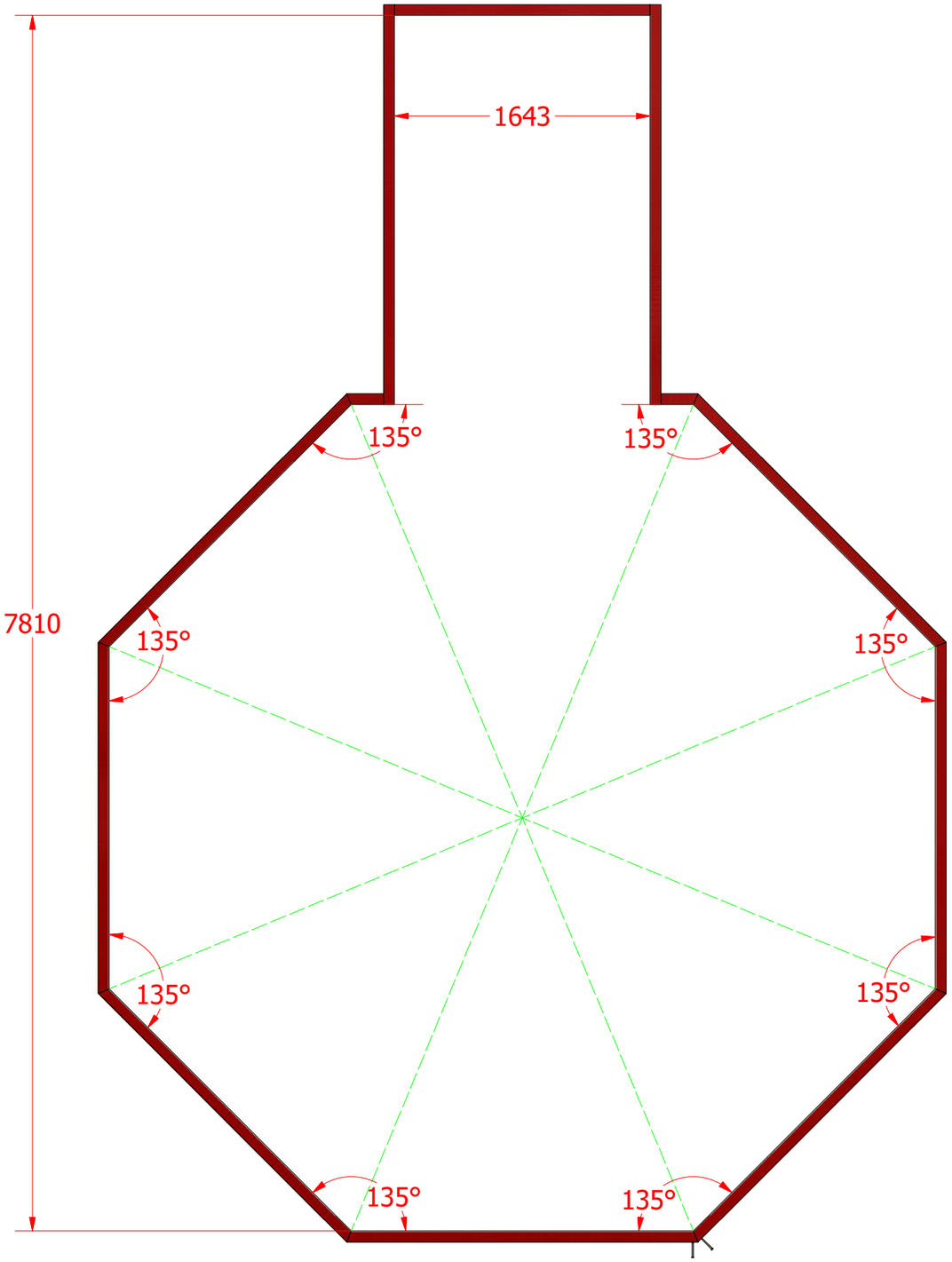

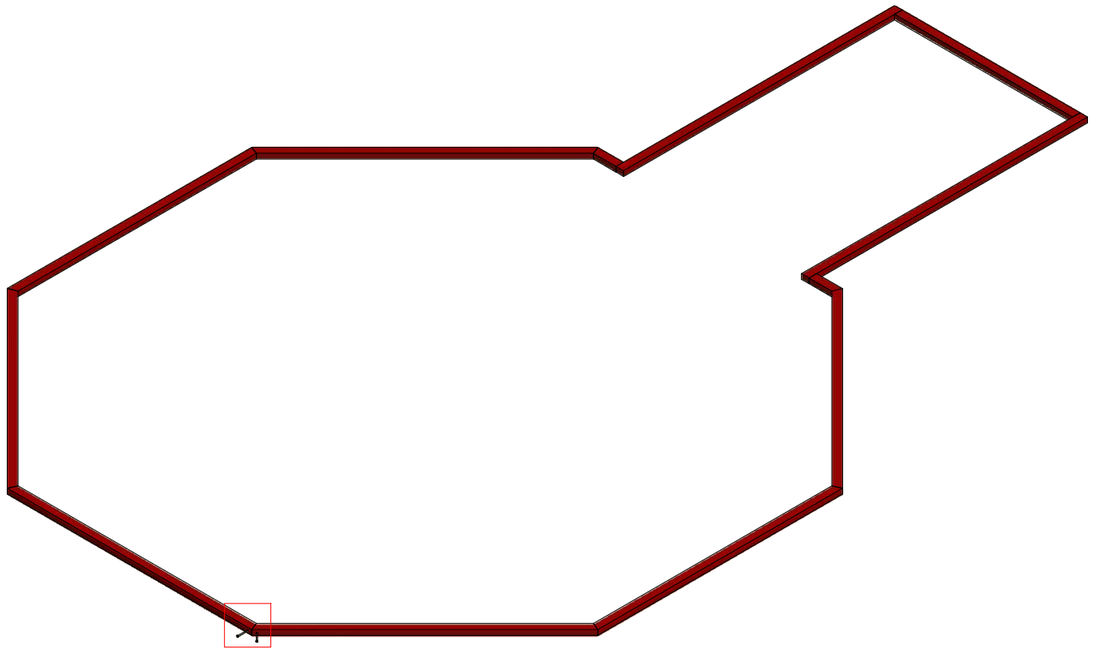

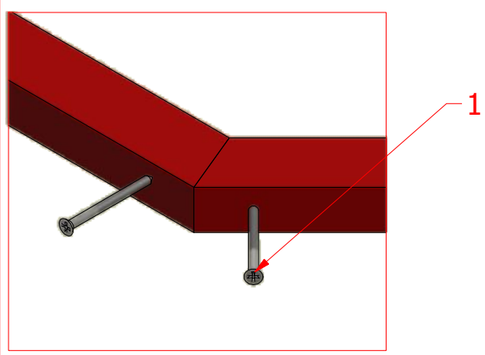

1

Grill cabin 25 m² with extension

Screws			
1	S2	4x70	72

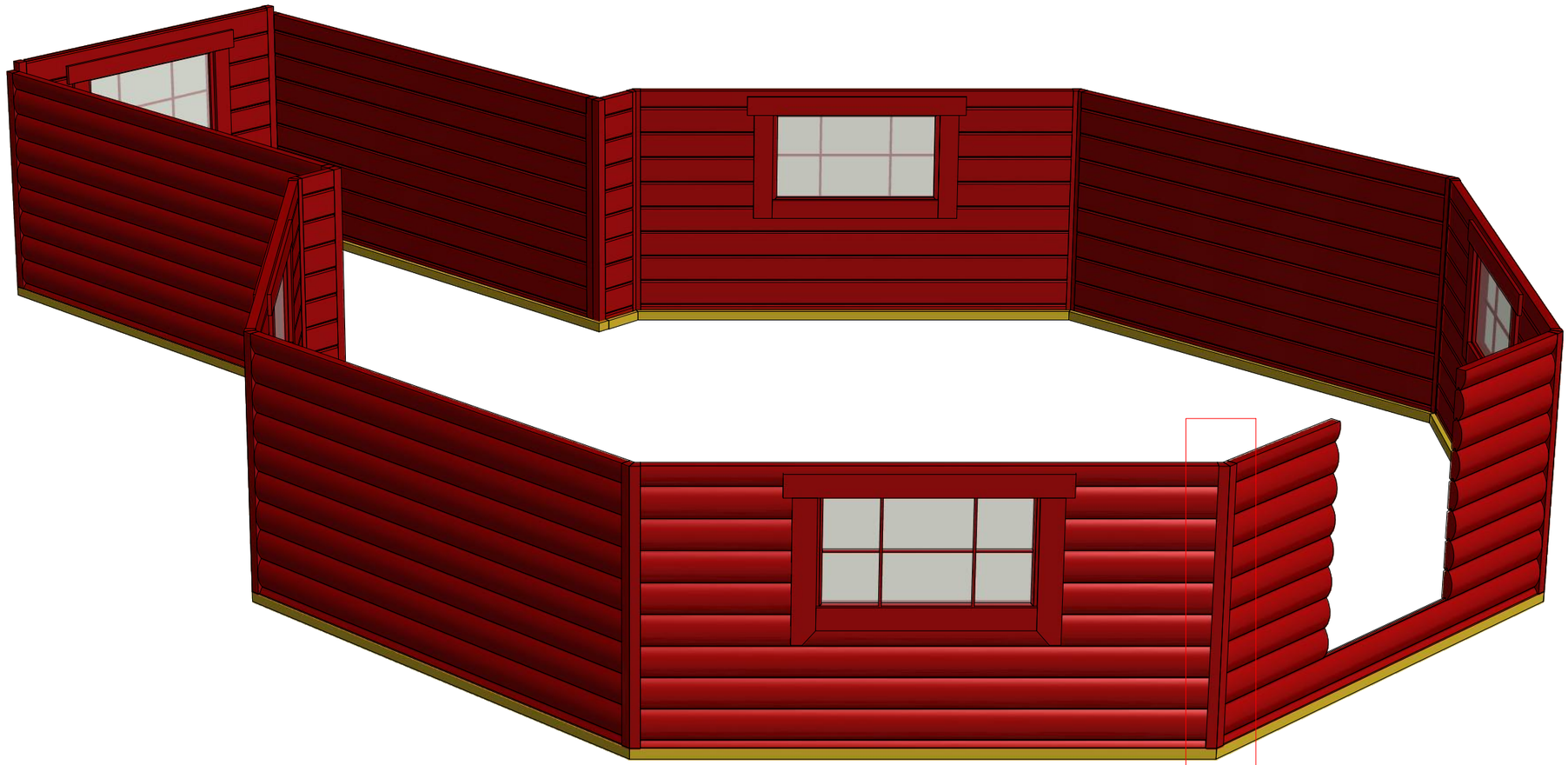



Grill cabin 25 m² with extension

Screws			
1	S2	4x70	40 pcs
2	S3	3.5x45	60 pcs

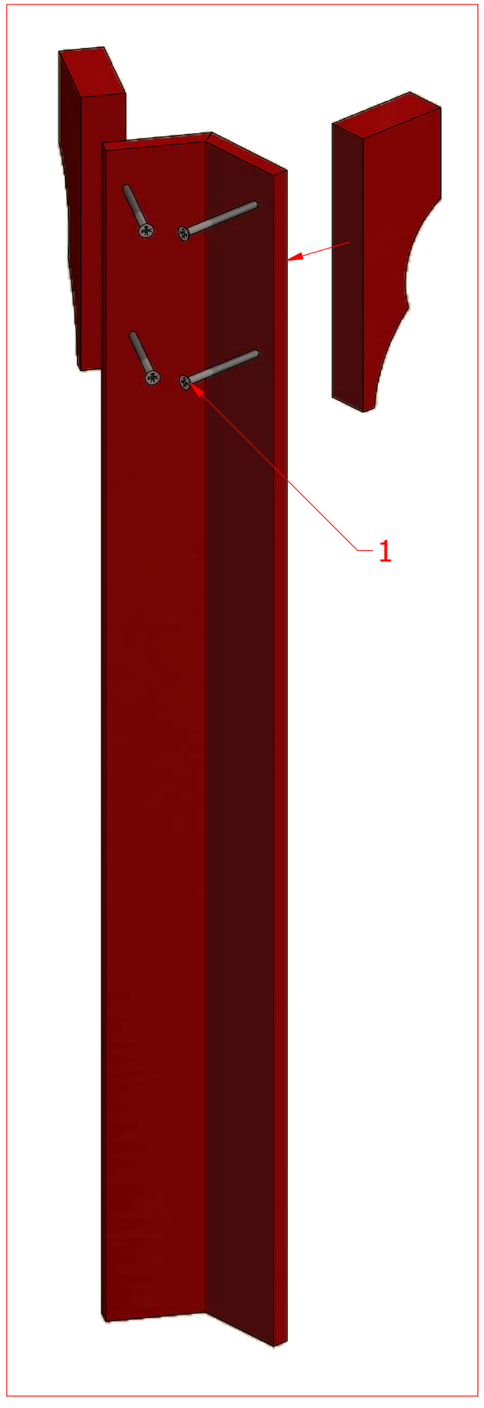

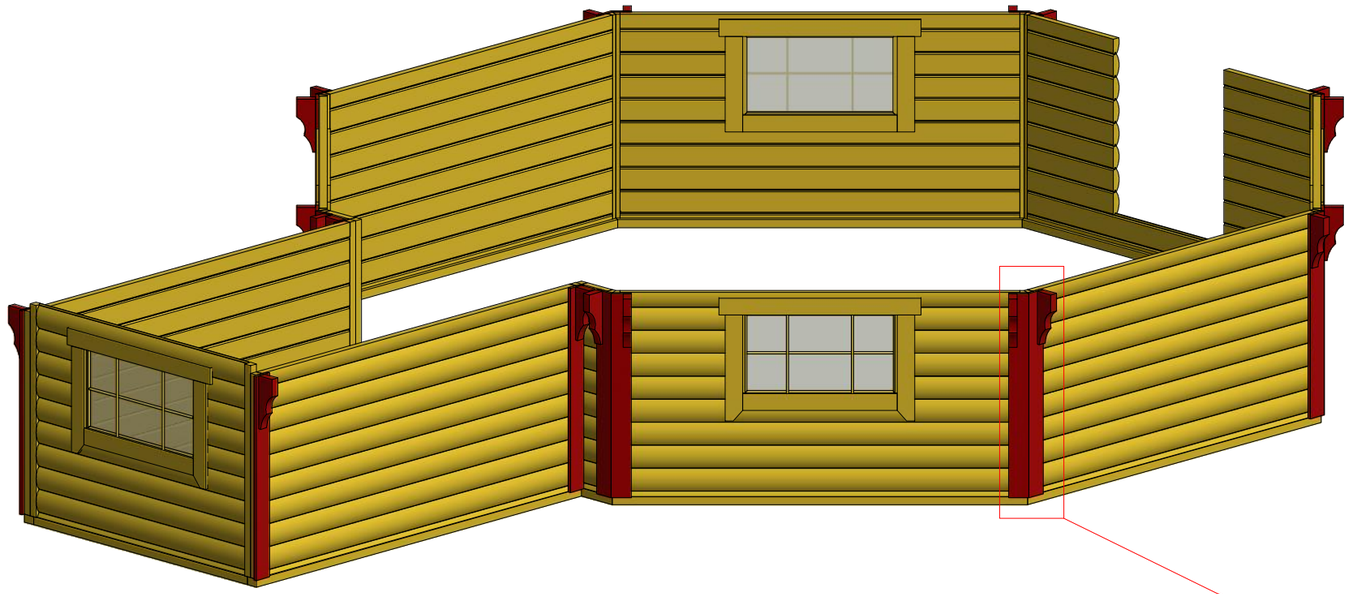

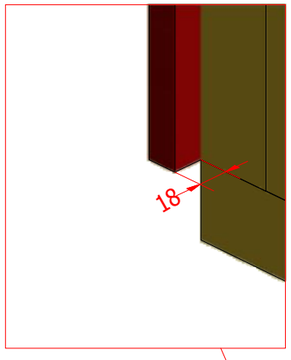

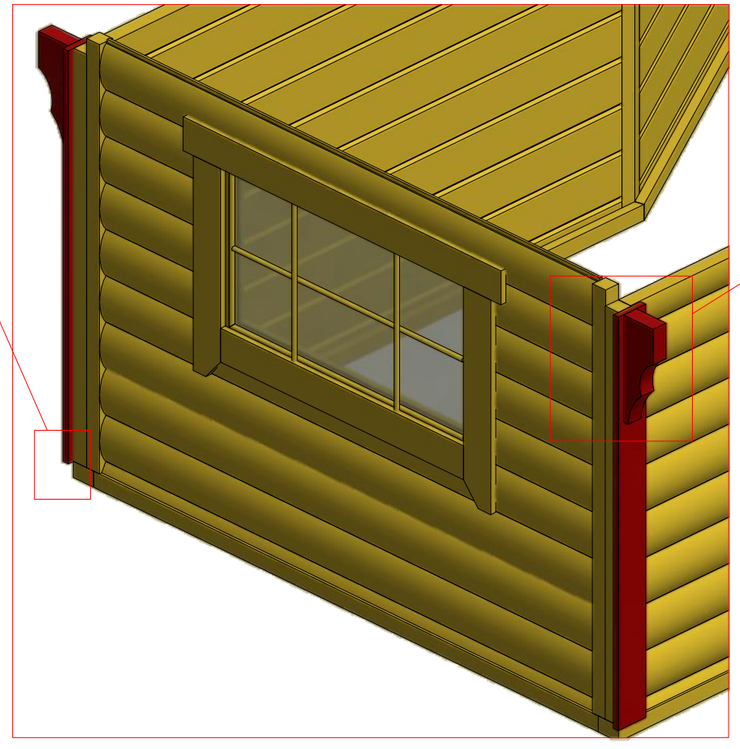

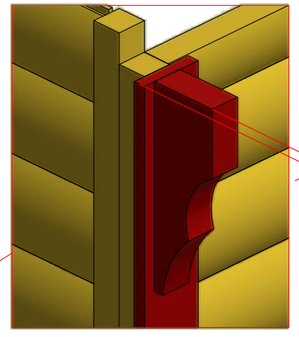

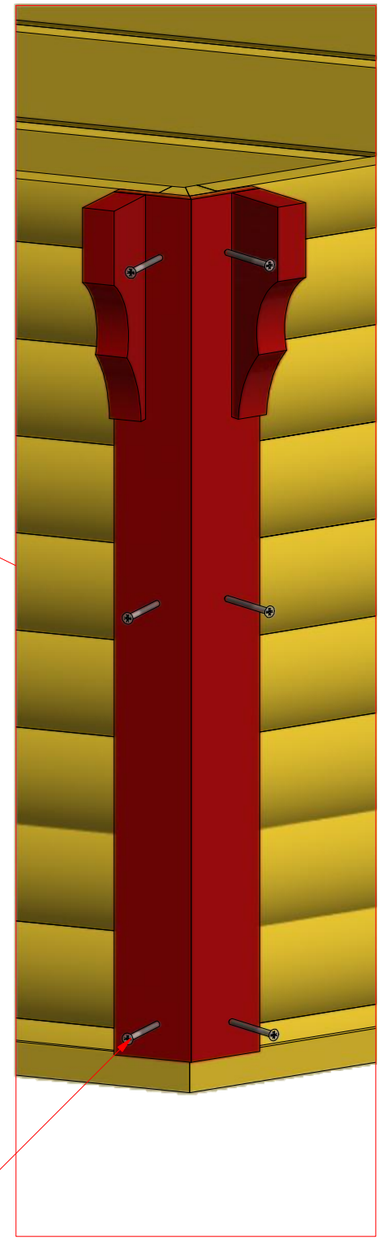

Grill cabin 25 m² with extension

Screws			
1	S1	5x100	90 pcs

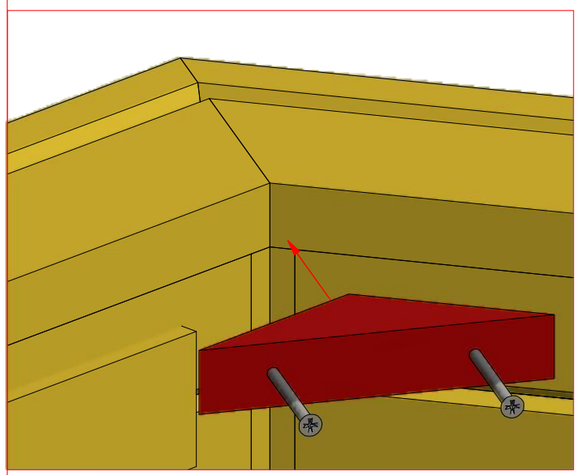

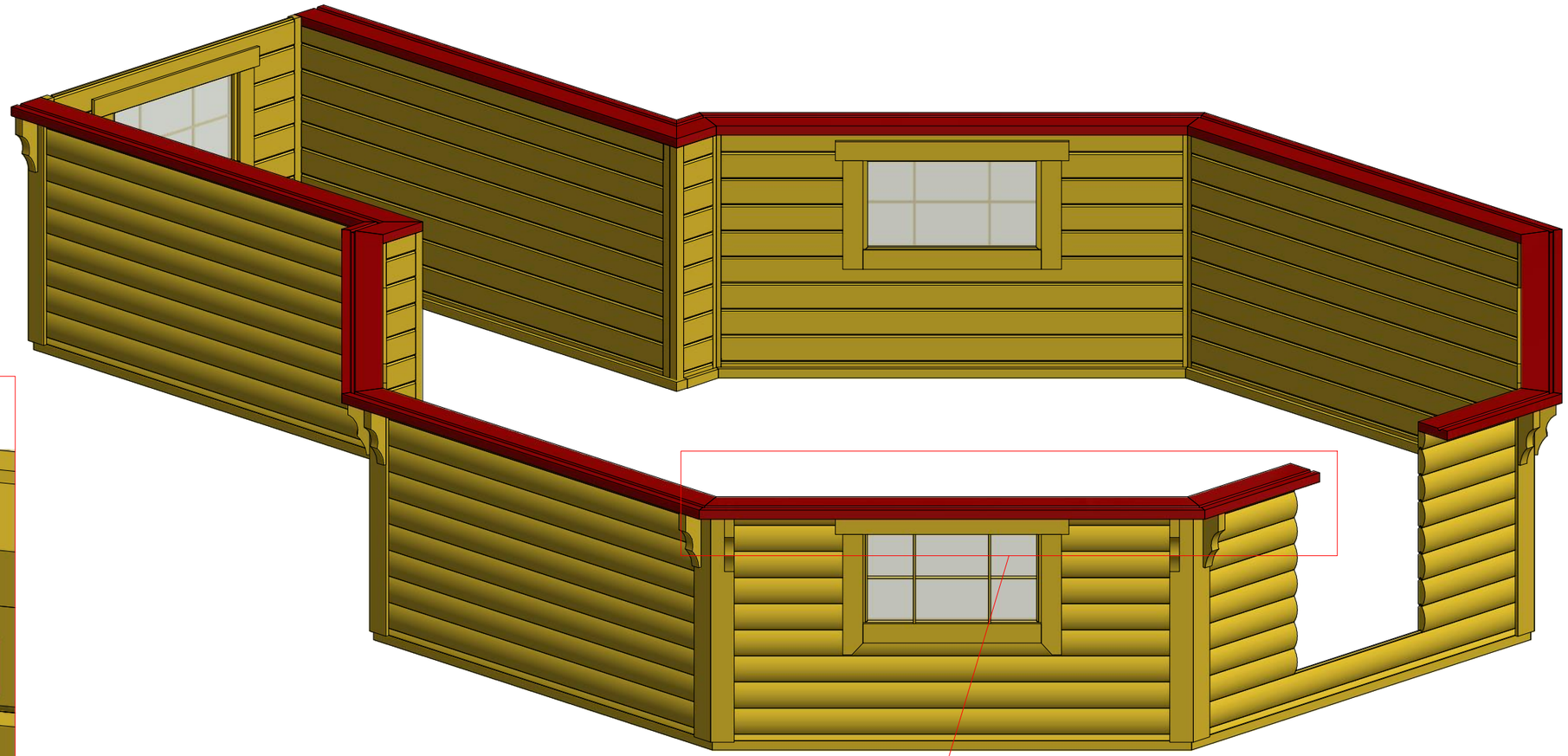

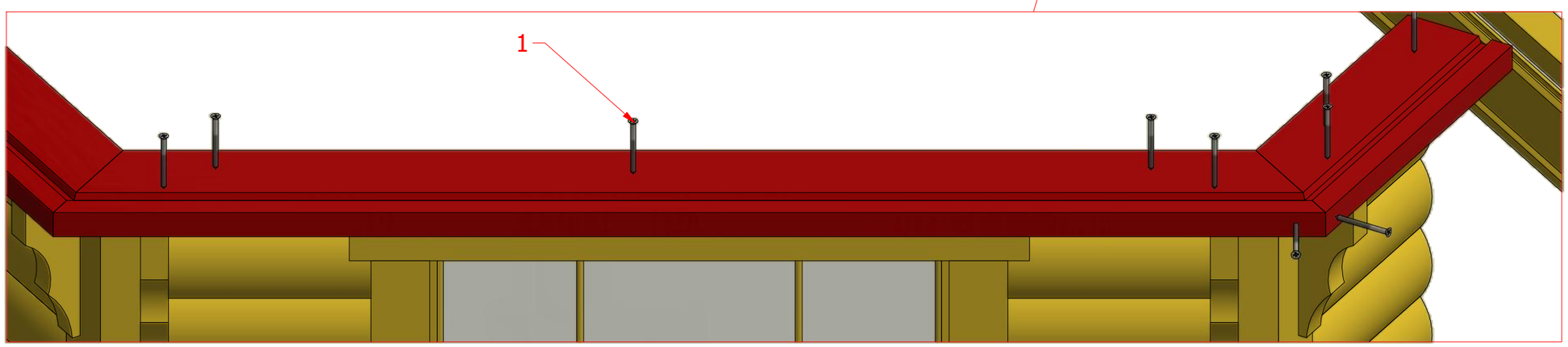

Grill cabin 25 m² with extension

Screws			
1	S1	5x100	2 pcs

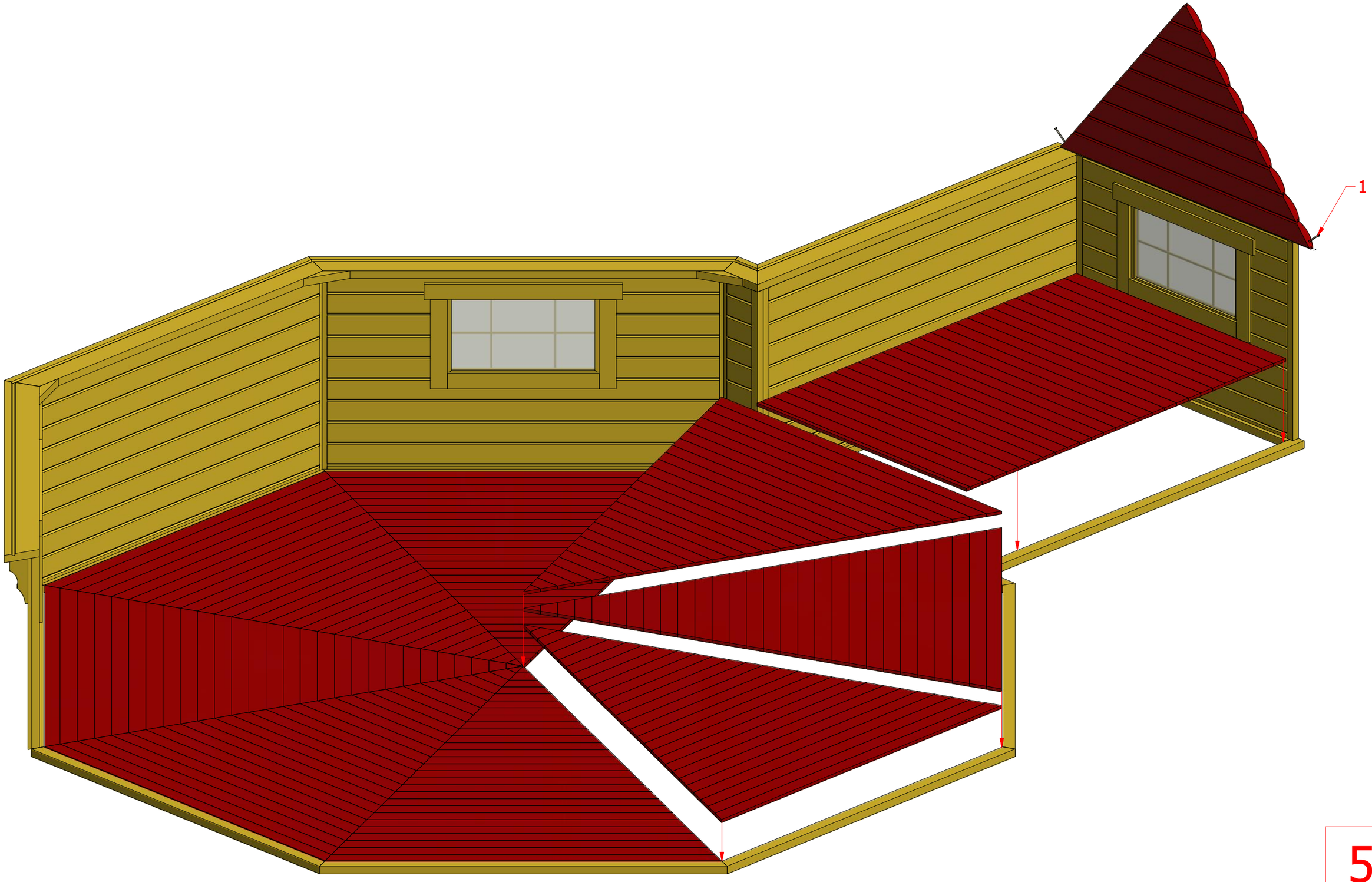

Grill cabin 25 m² with extension

Screws			
1	S2	4x70	70 pcs

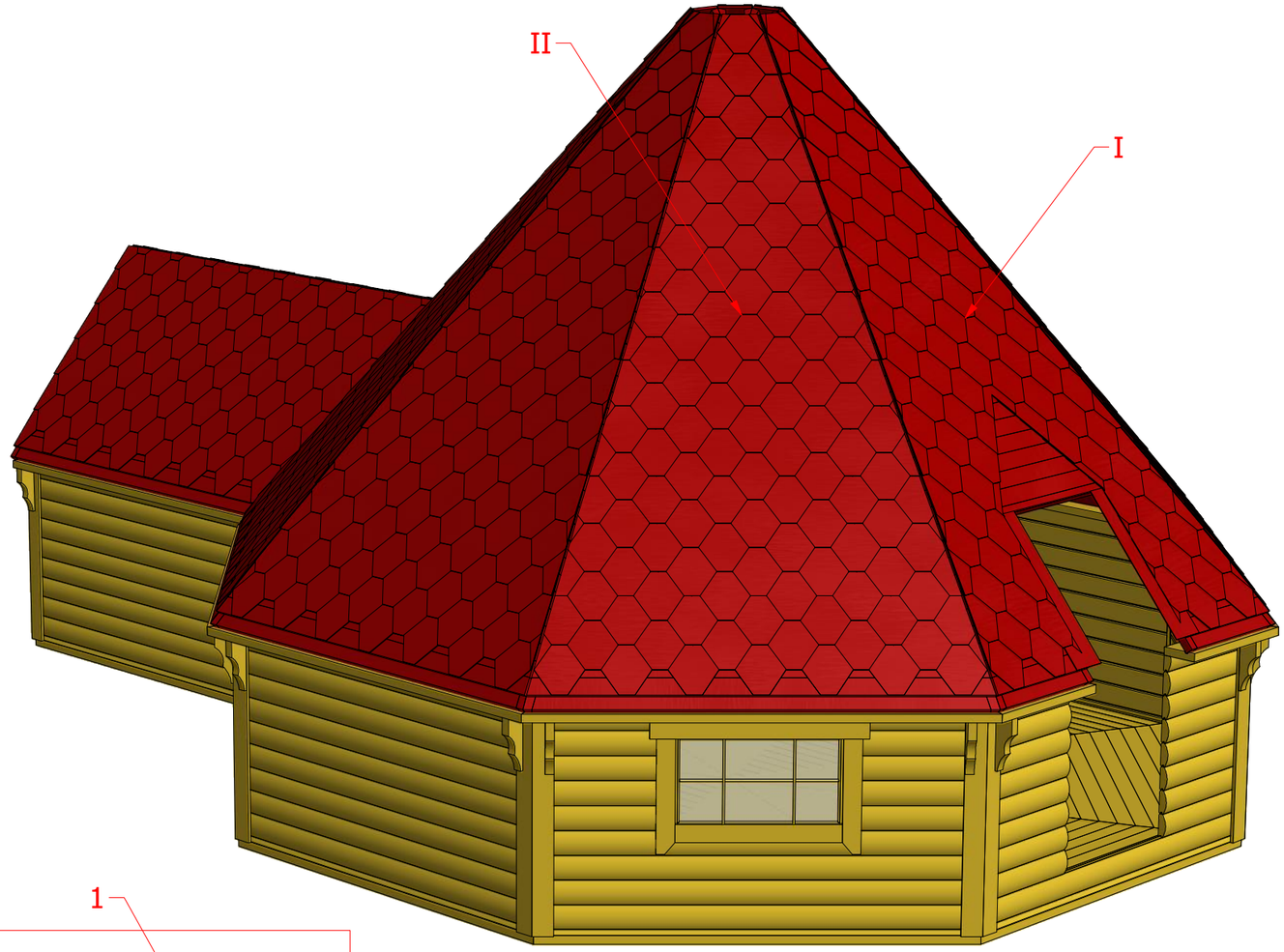

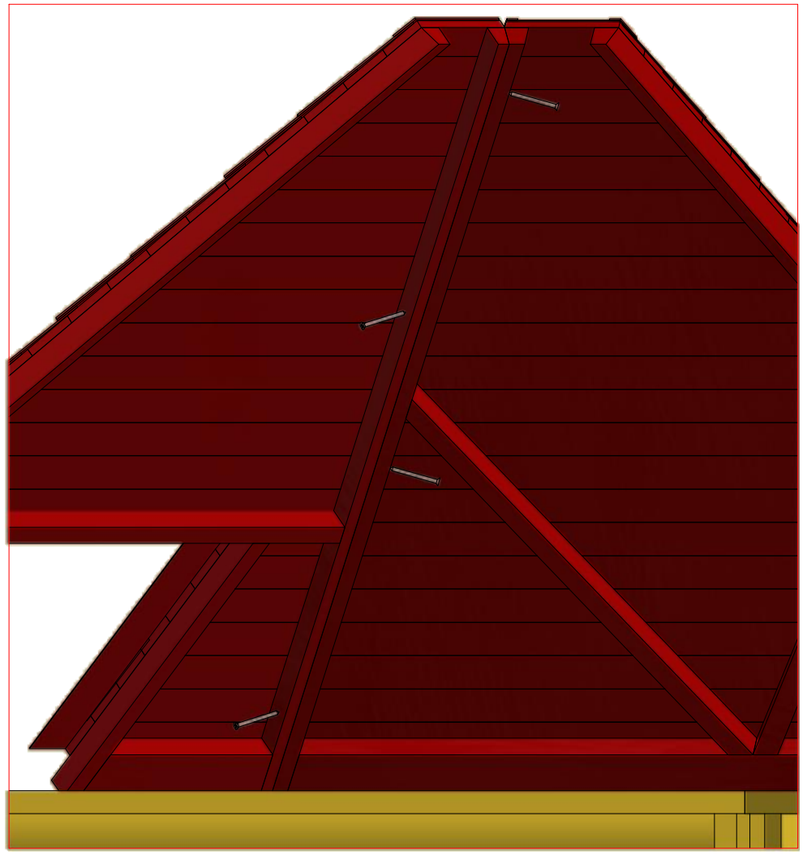

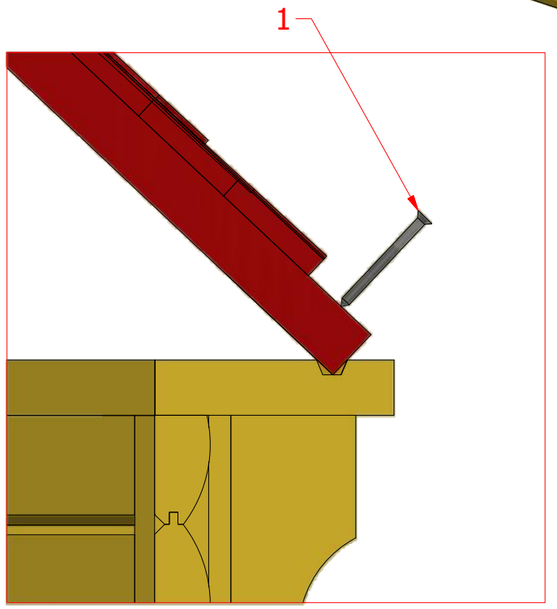

Grill cabin 25 m² with extension

Screws			
1	S3	3.5x45	40 pcs
2	V1	2.5x25	

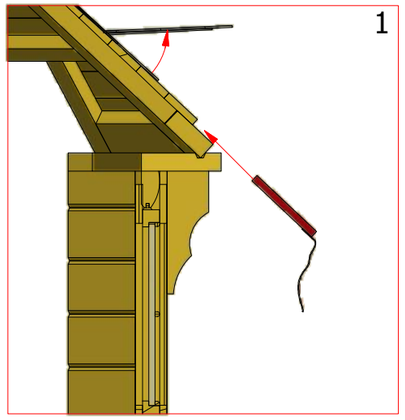

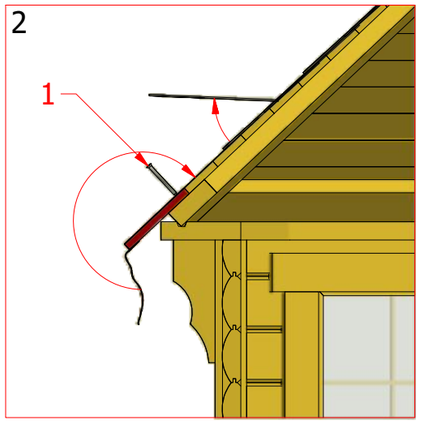

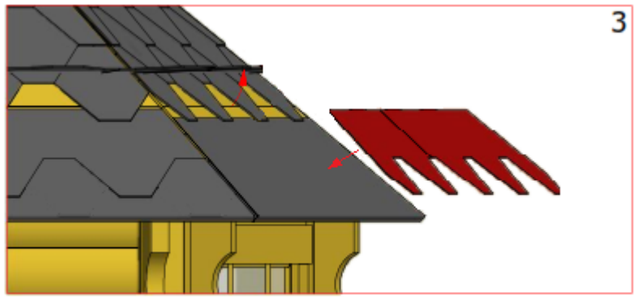

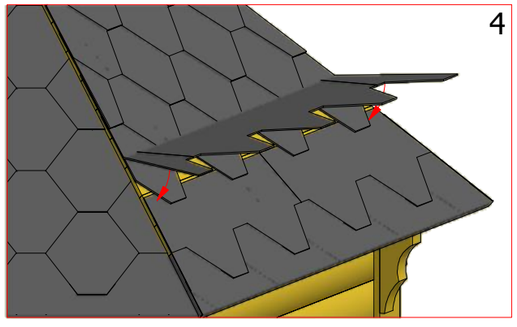

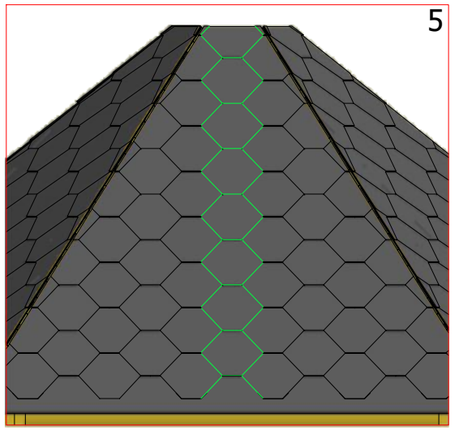

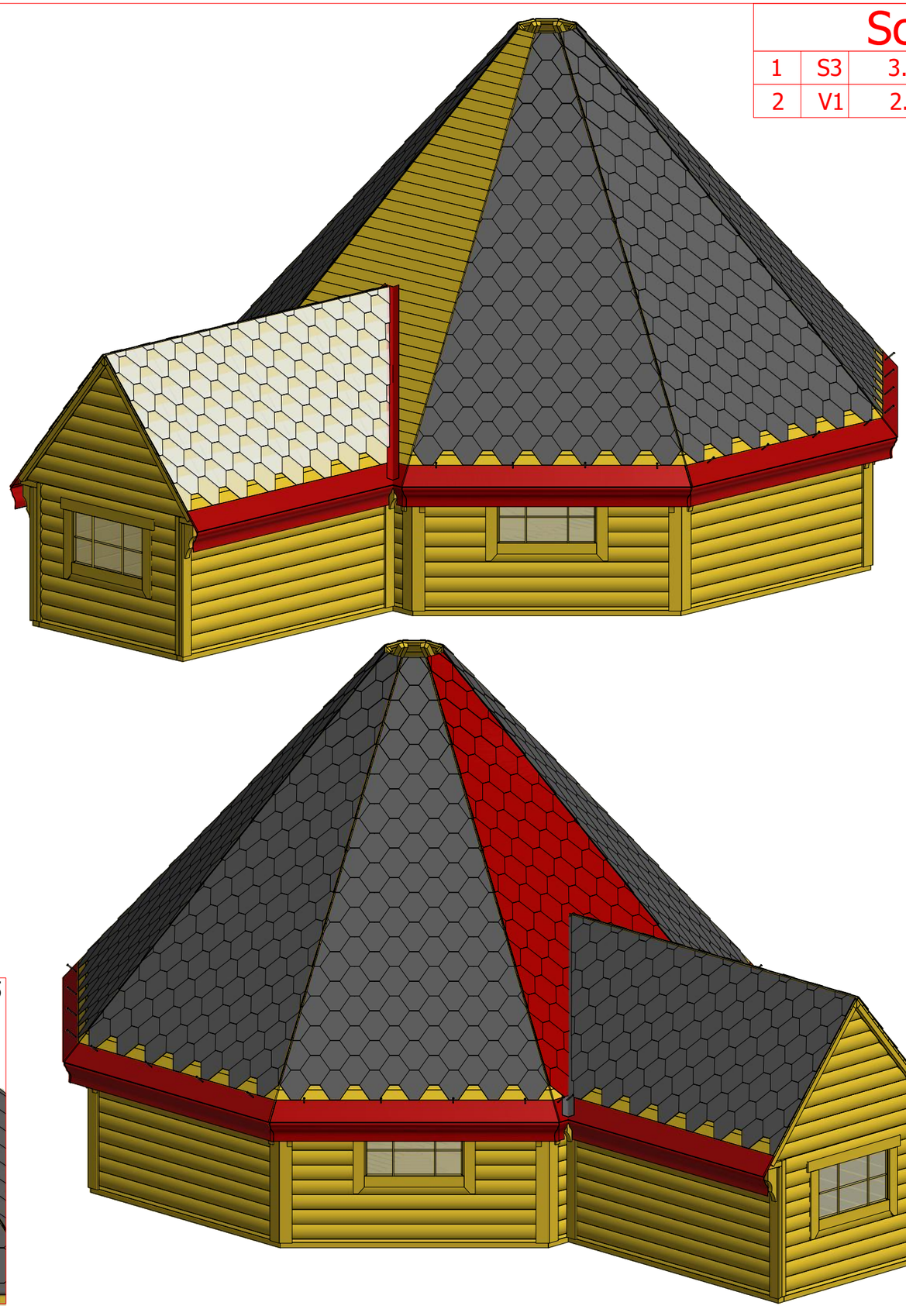

Grill cabin 25 m² with extension

Screws			
1	S3	3.5x45	44 pcs

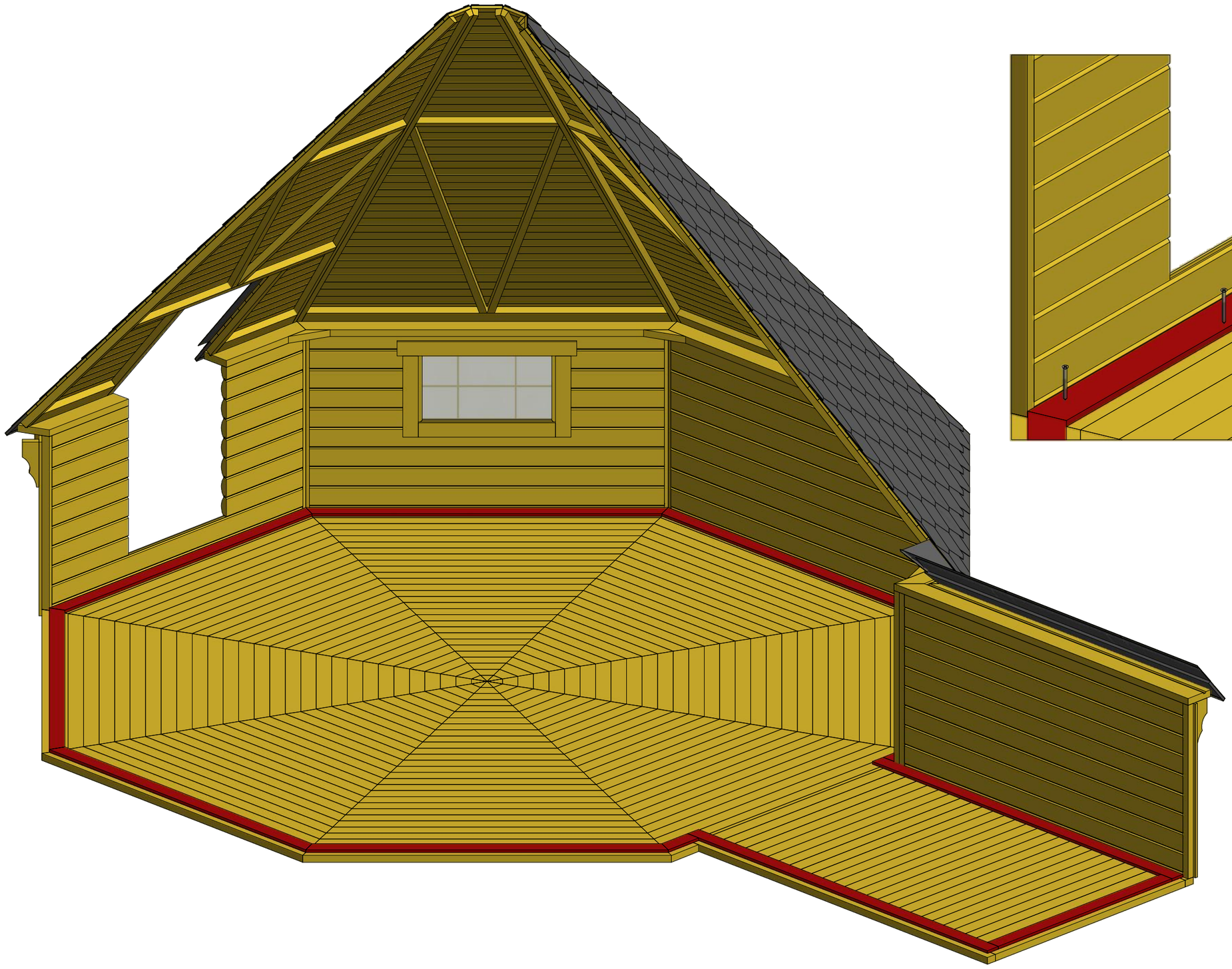

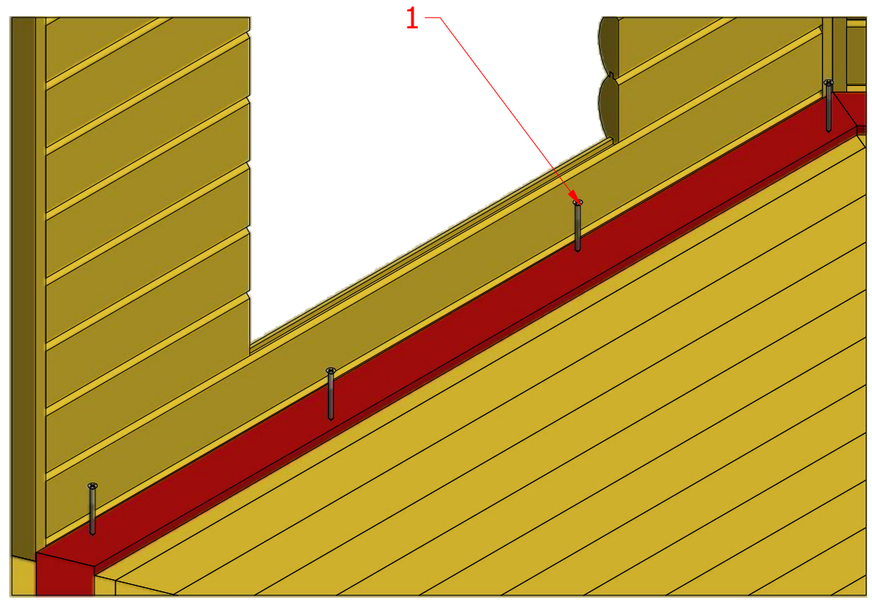

Grill cabin 25 m² with extension

Screws			
1	S2	4x70	144 pcs
2	S3	3.5x45	40 pcs

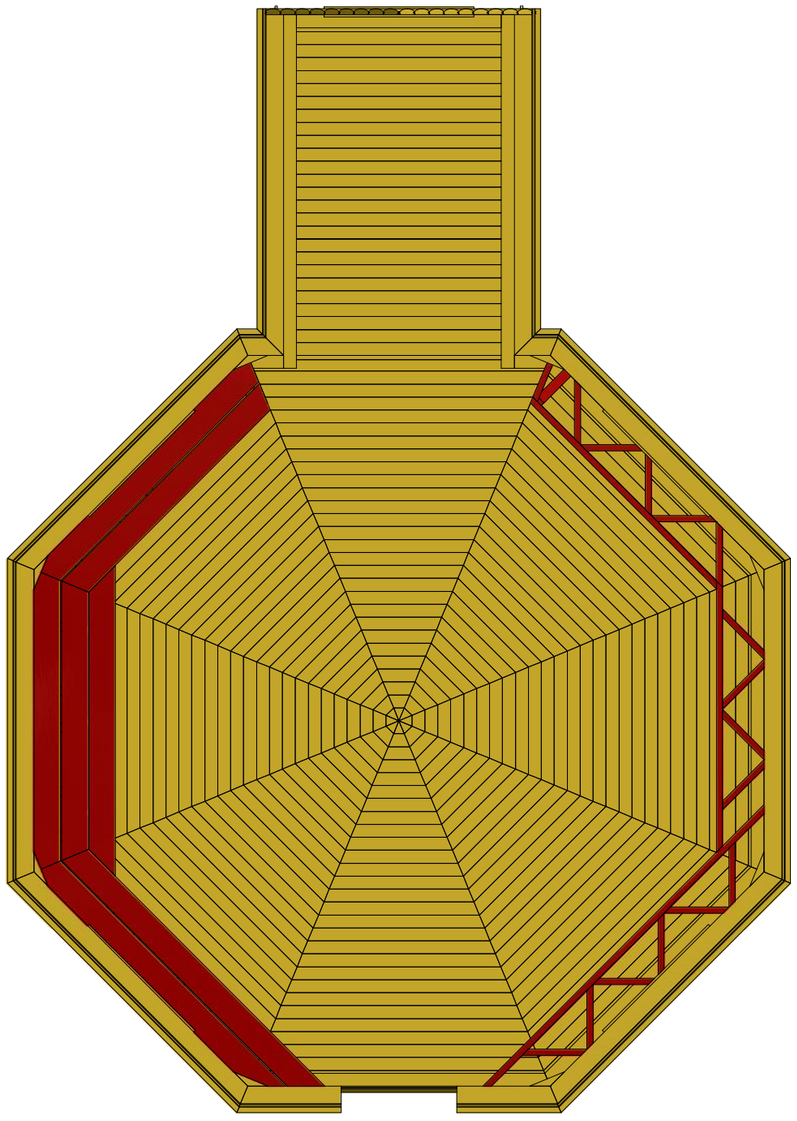

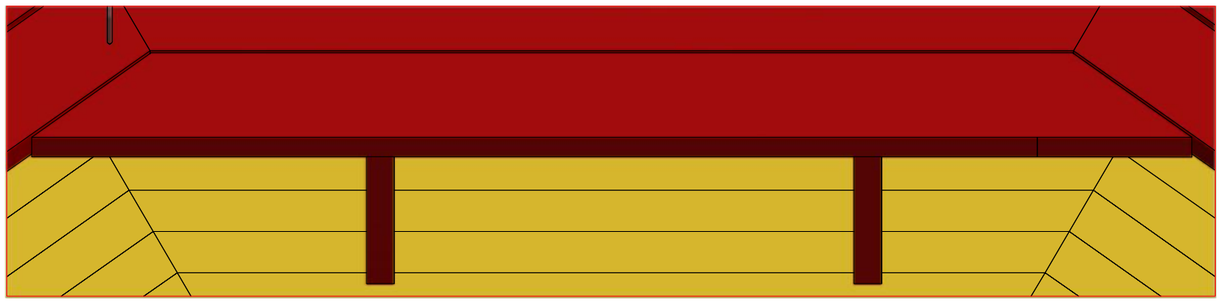

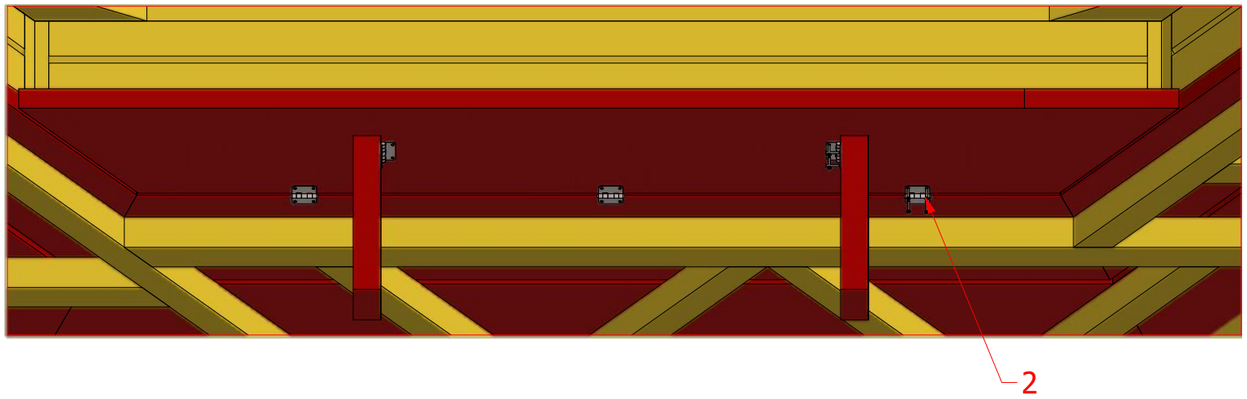

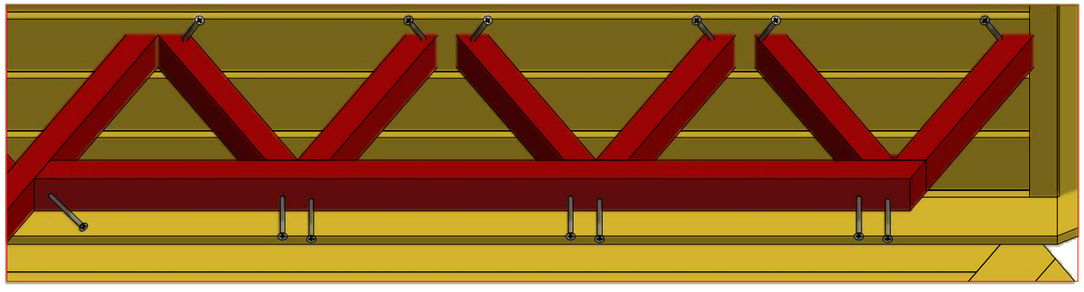

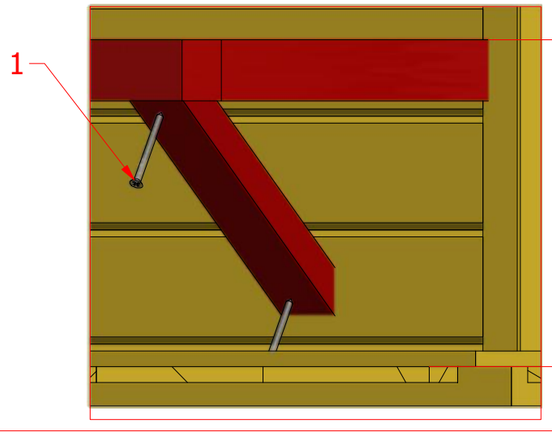

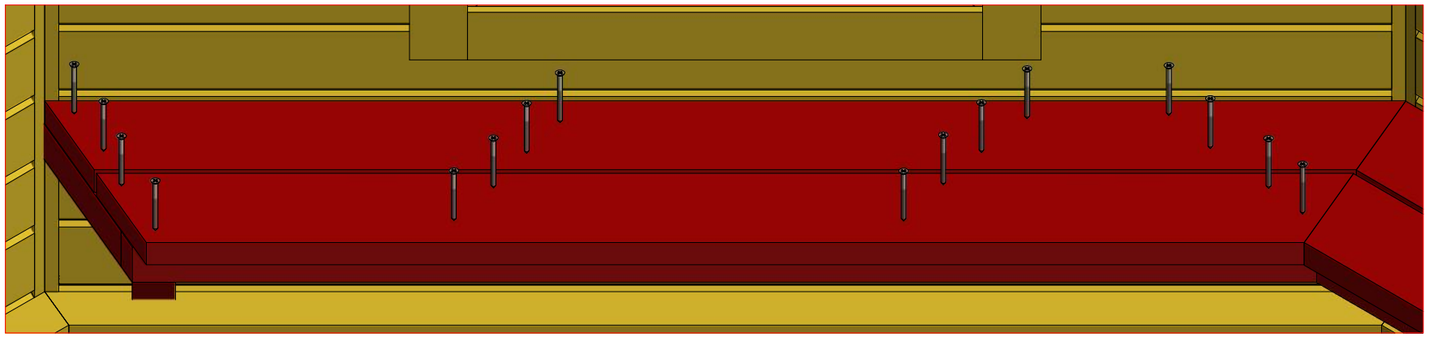

Grill cabin 25 m² with extension

Screws			
1	S2	4x70	10 pcs

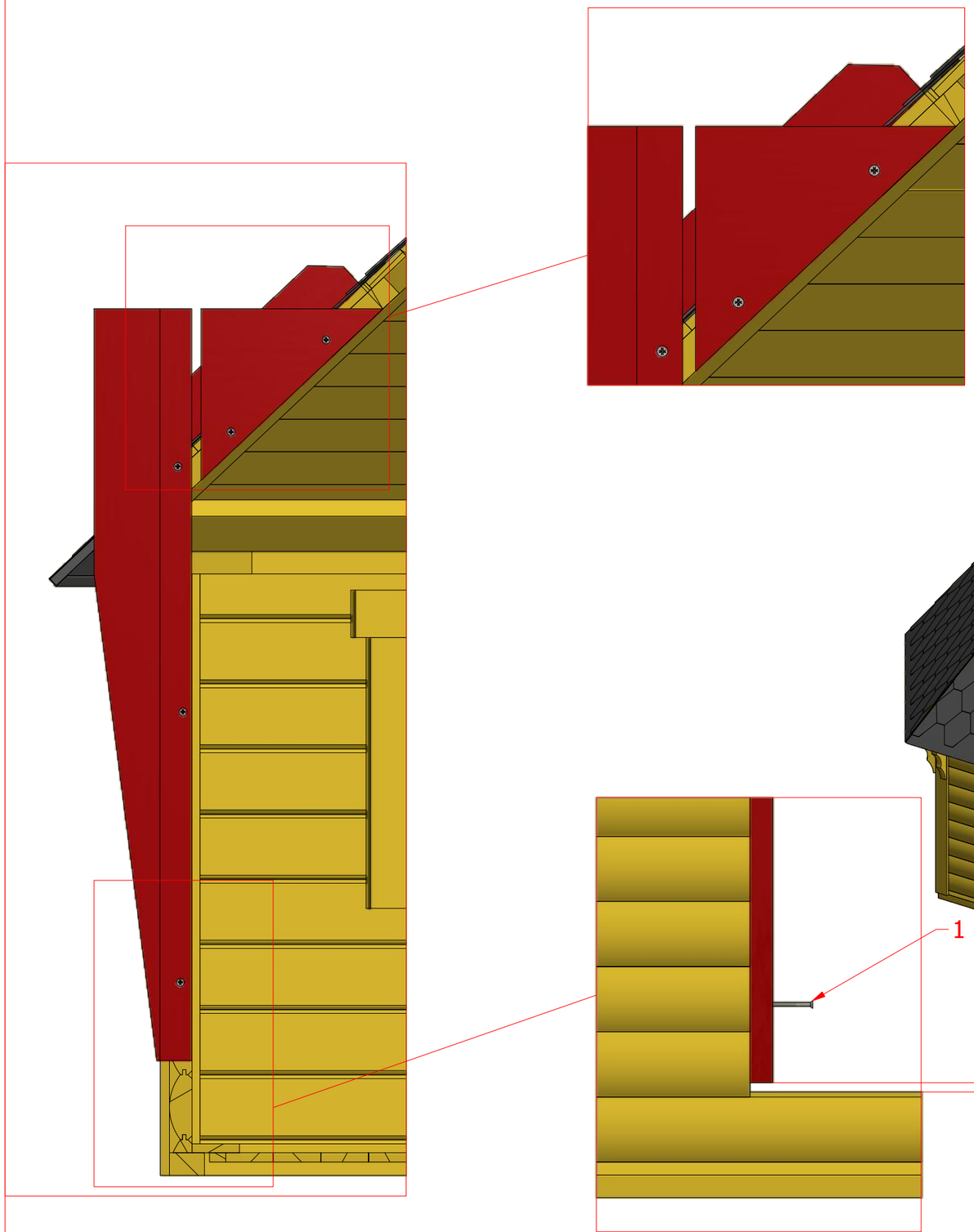

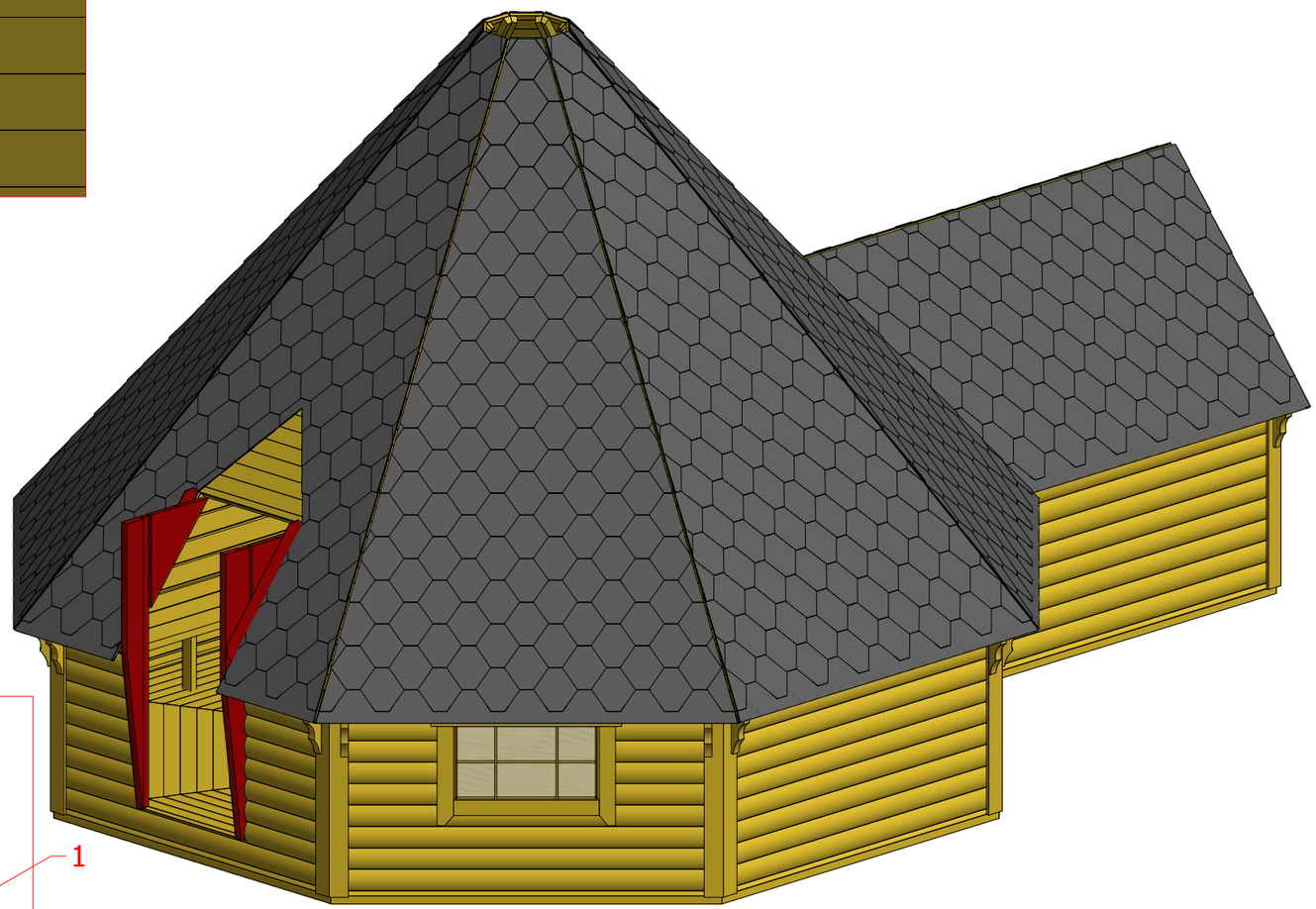

Grill cabin 25 m² with extension

Screws			

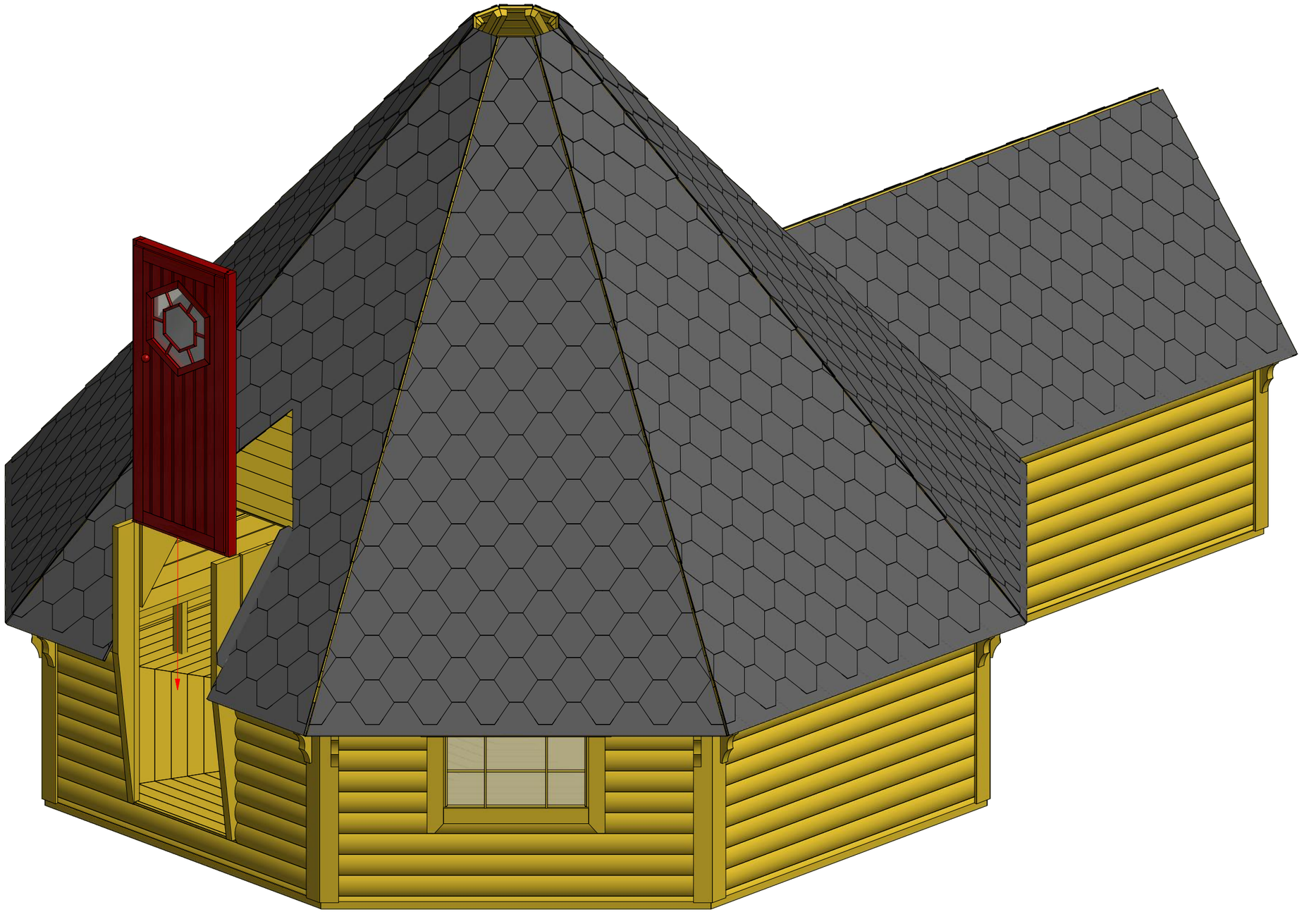

Grill cabin 25 m² with extension

Screws			
1	S2	4x70	16 pcs

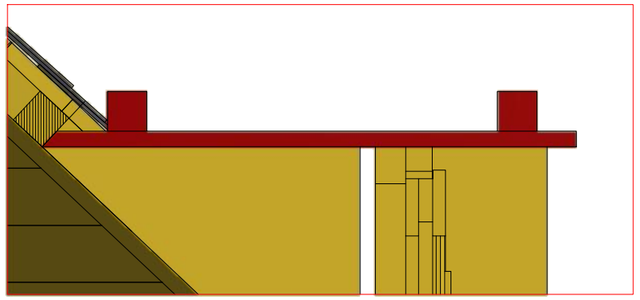

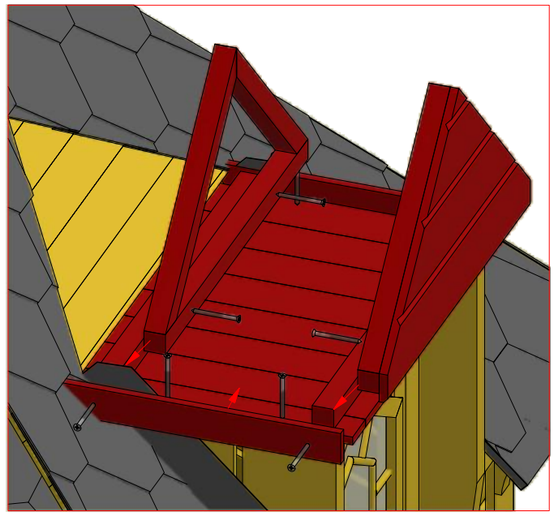

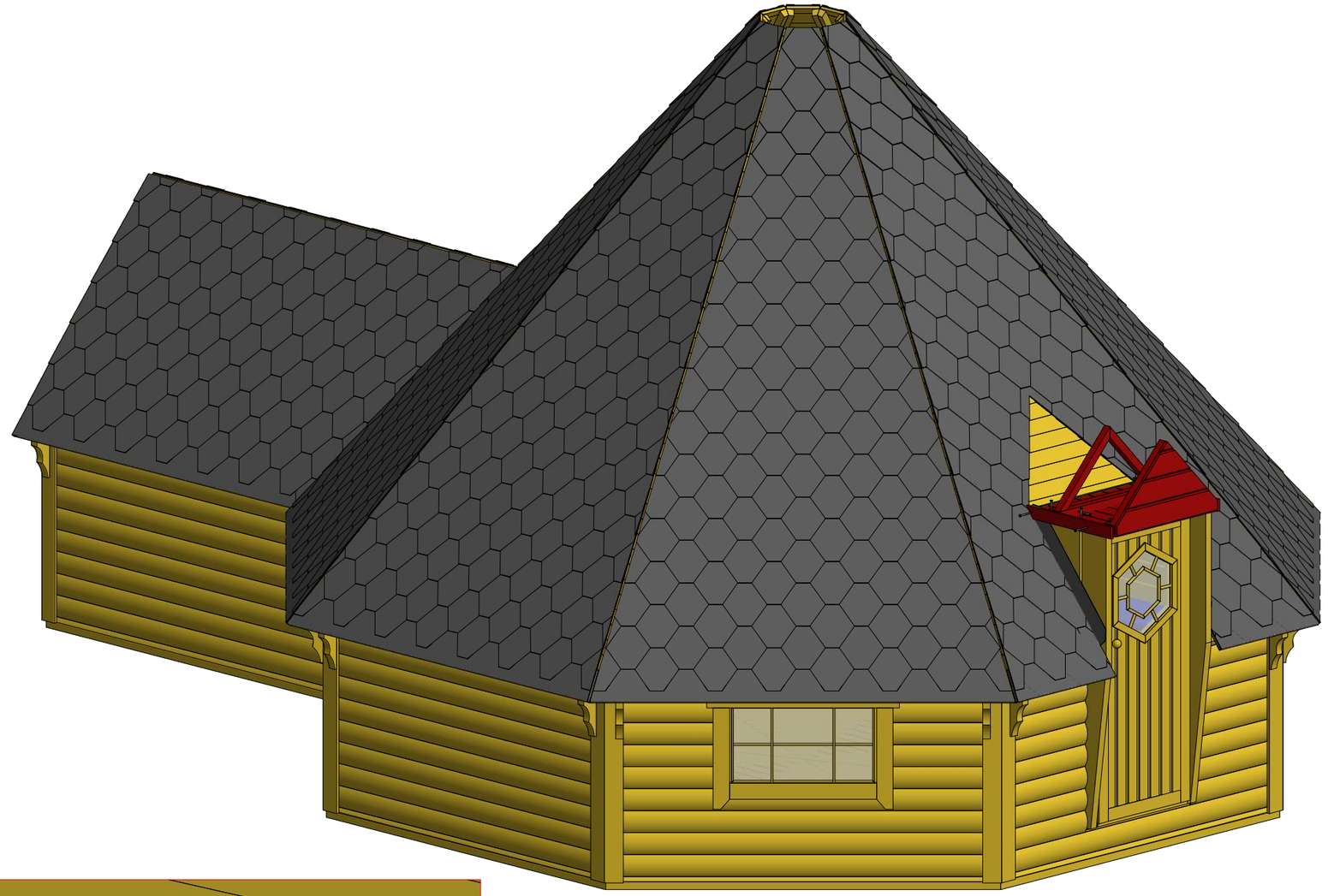

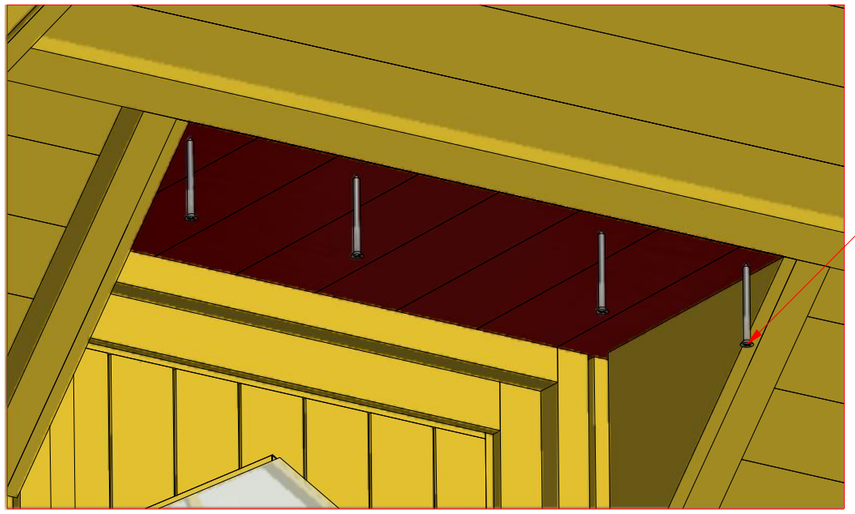

Grill cabin 25 m² with extension

Screws			
1	S1	5x100	8 pcs
2	S3	3.5x45	4 pcs

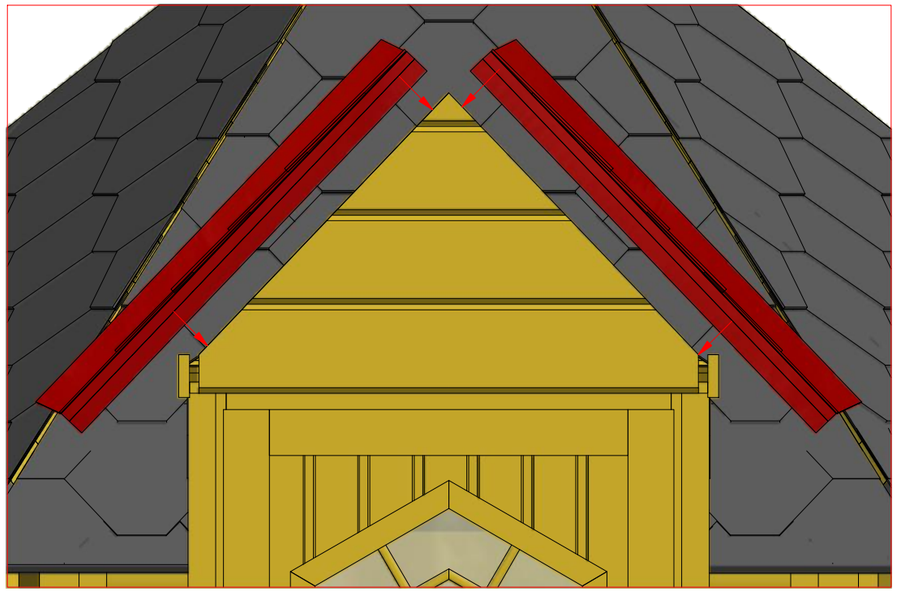

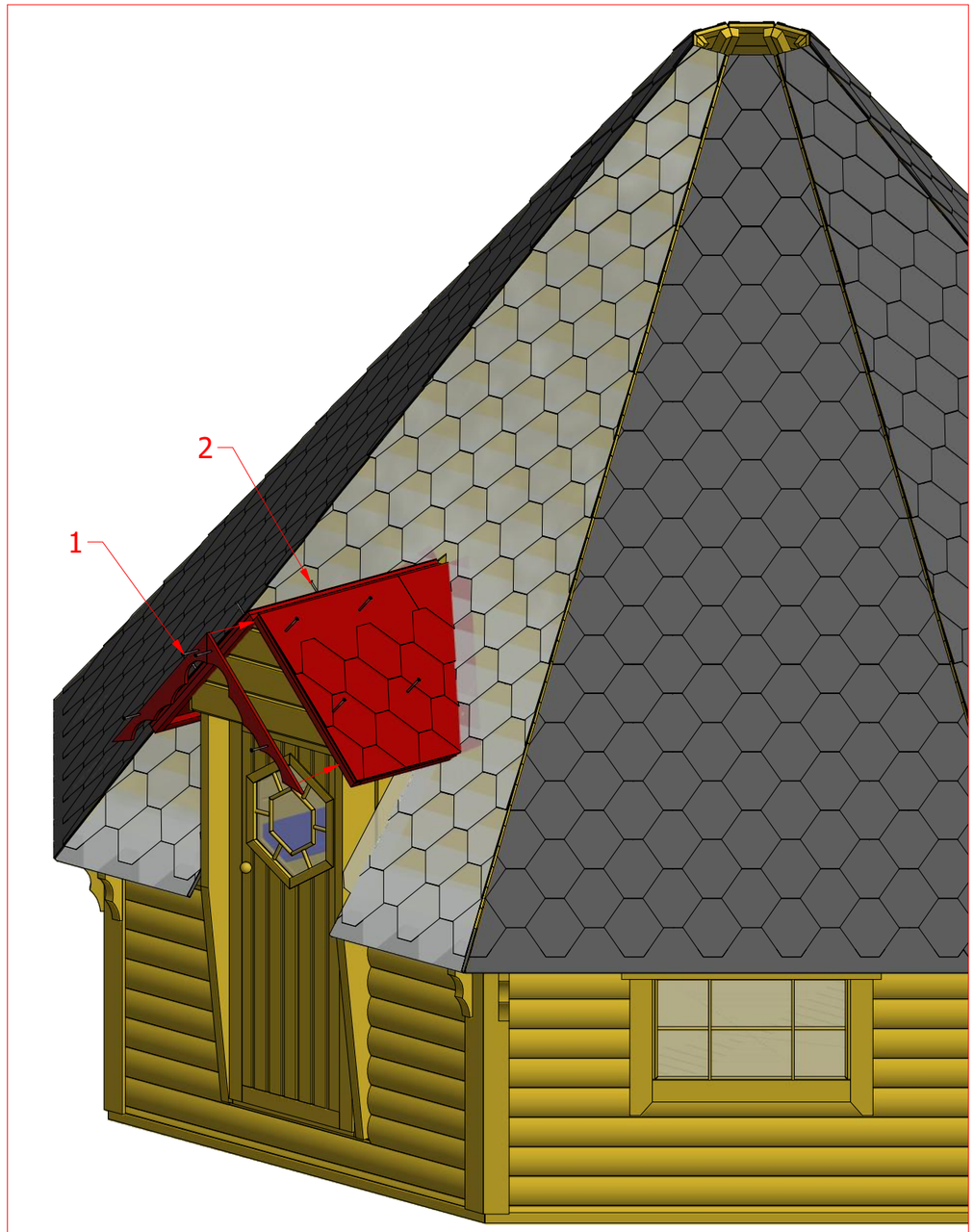

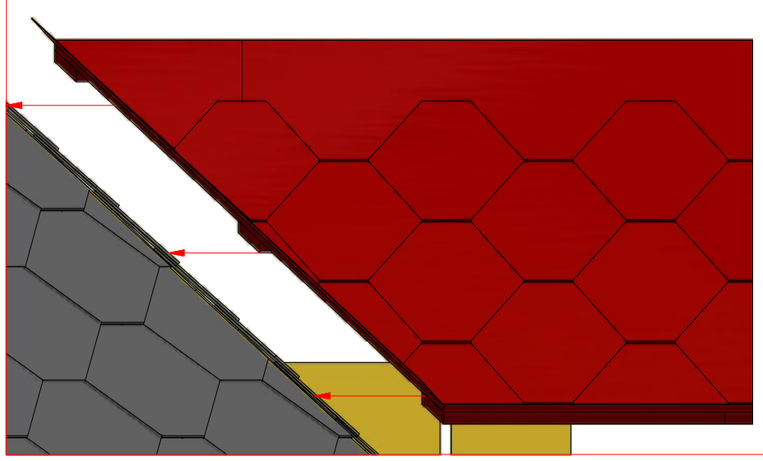

Grill cabin 25 m² with extension

Screws			
1	S1	5x100	8 pcs

1

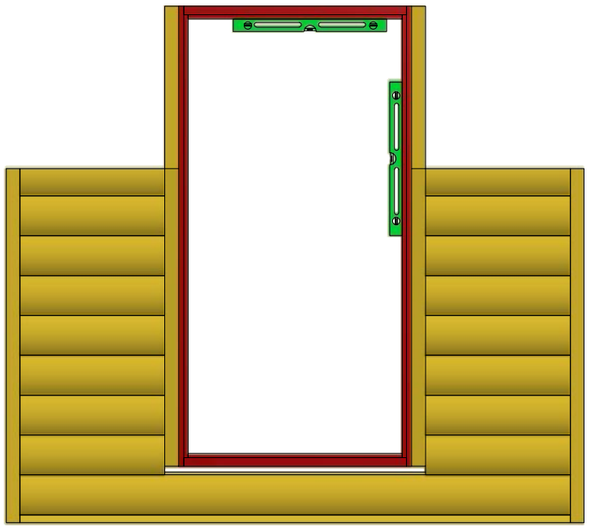

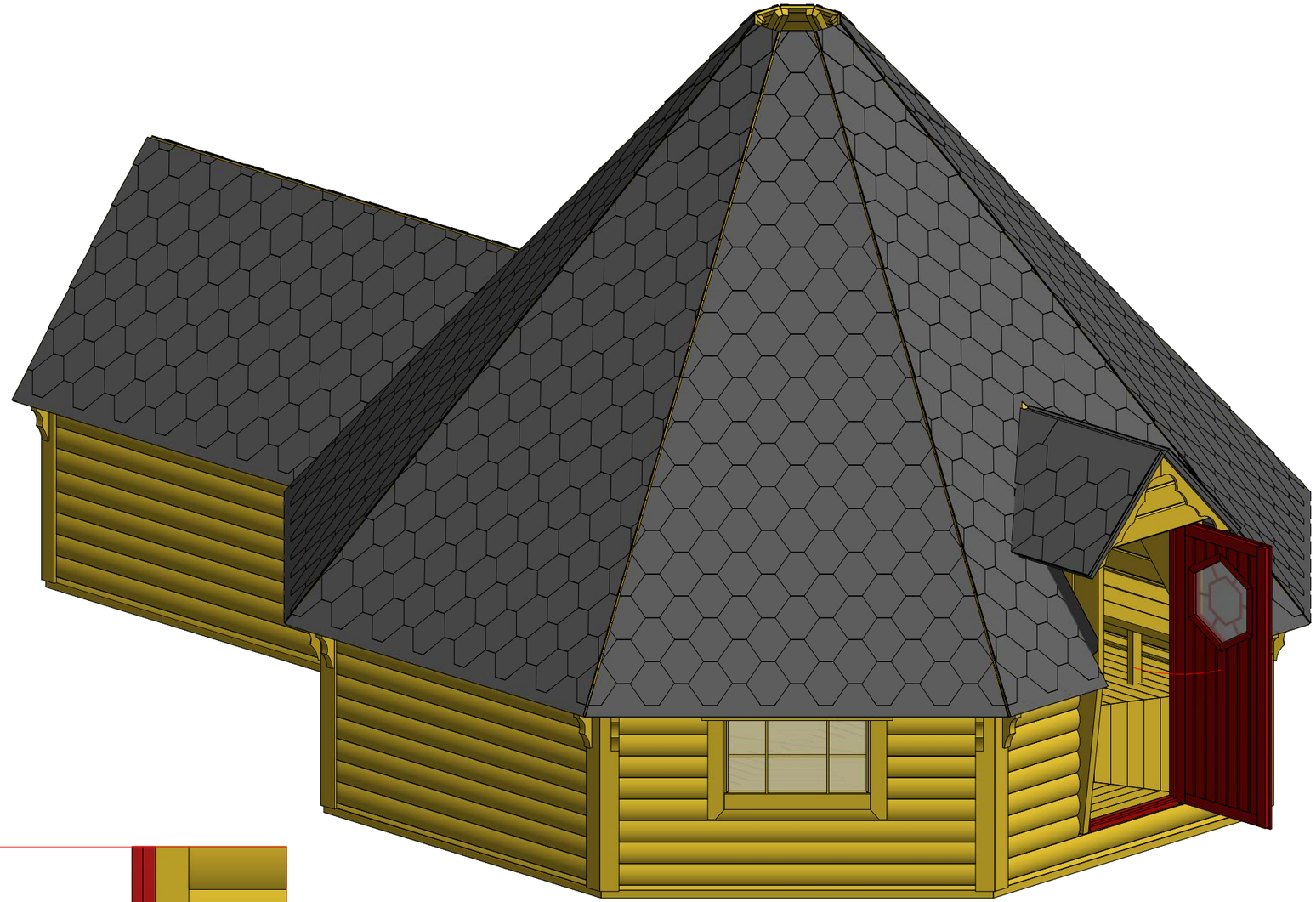

2

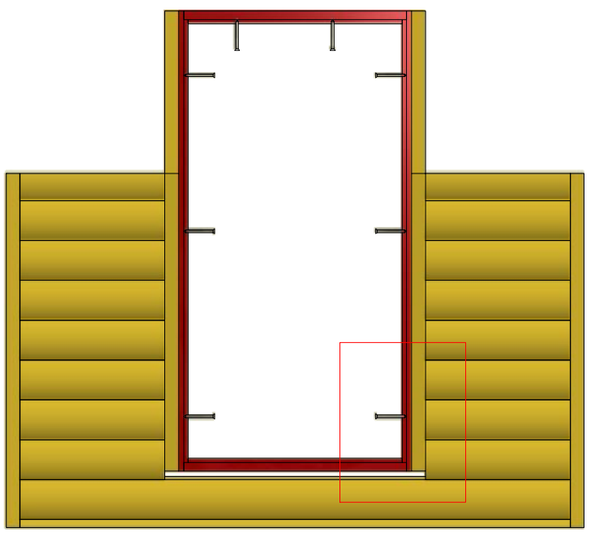

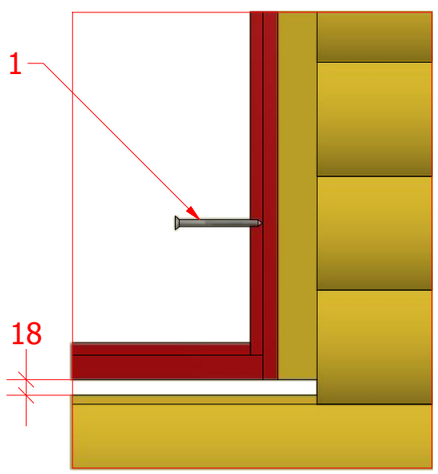

Grill cabin 25 m² with extension

Screws			
1	S3	3.5x45	80 pcs

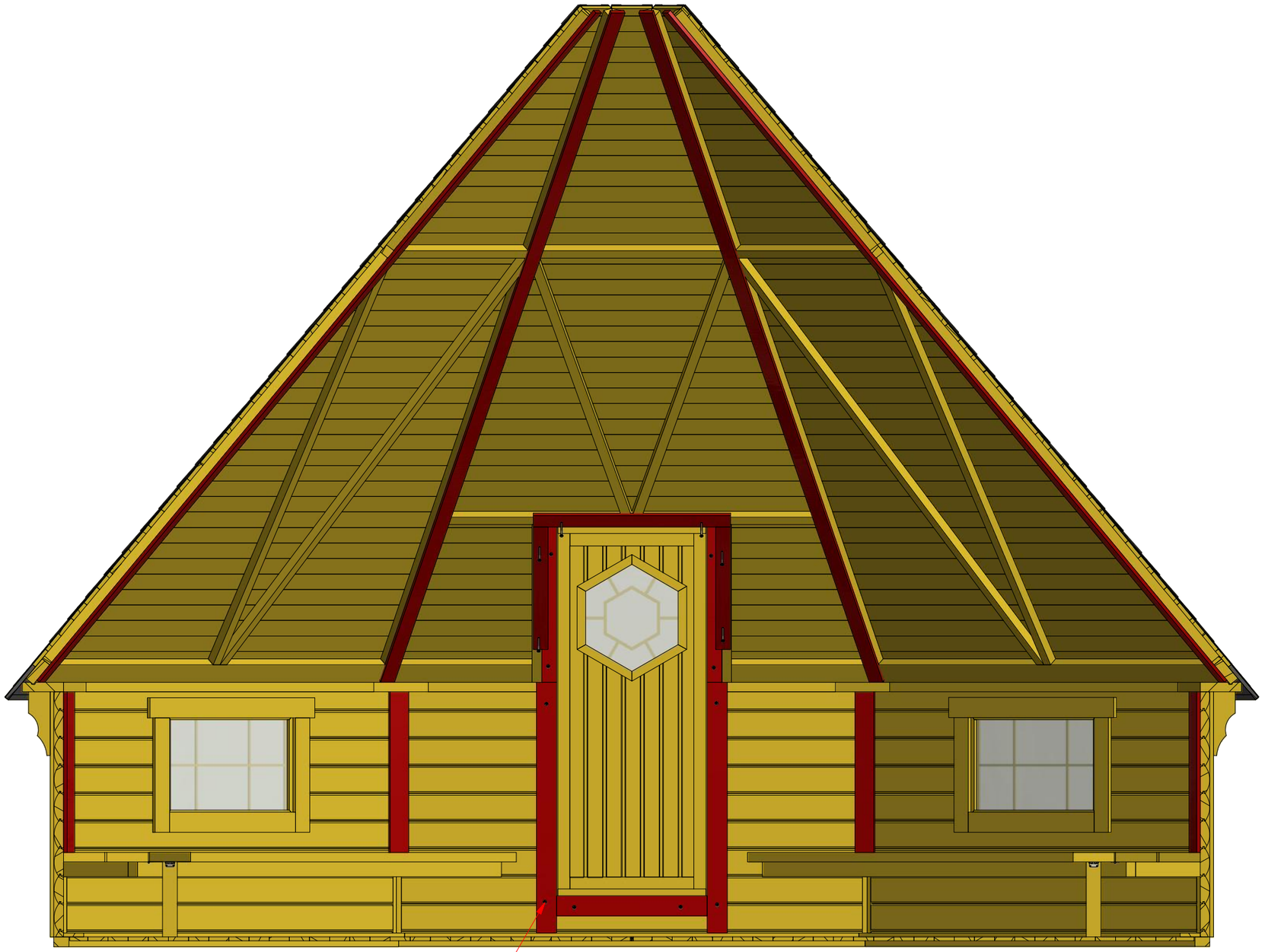

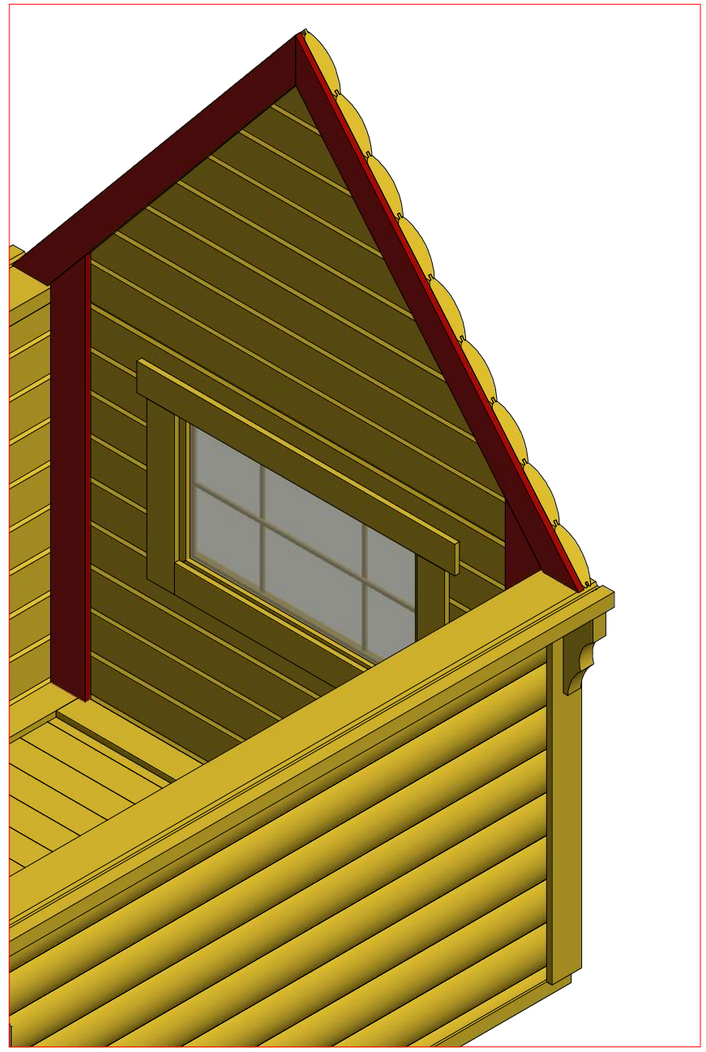

Grill cabin 25 m² with extension

Screws			
1	S3	3.5x45	36 pcs

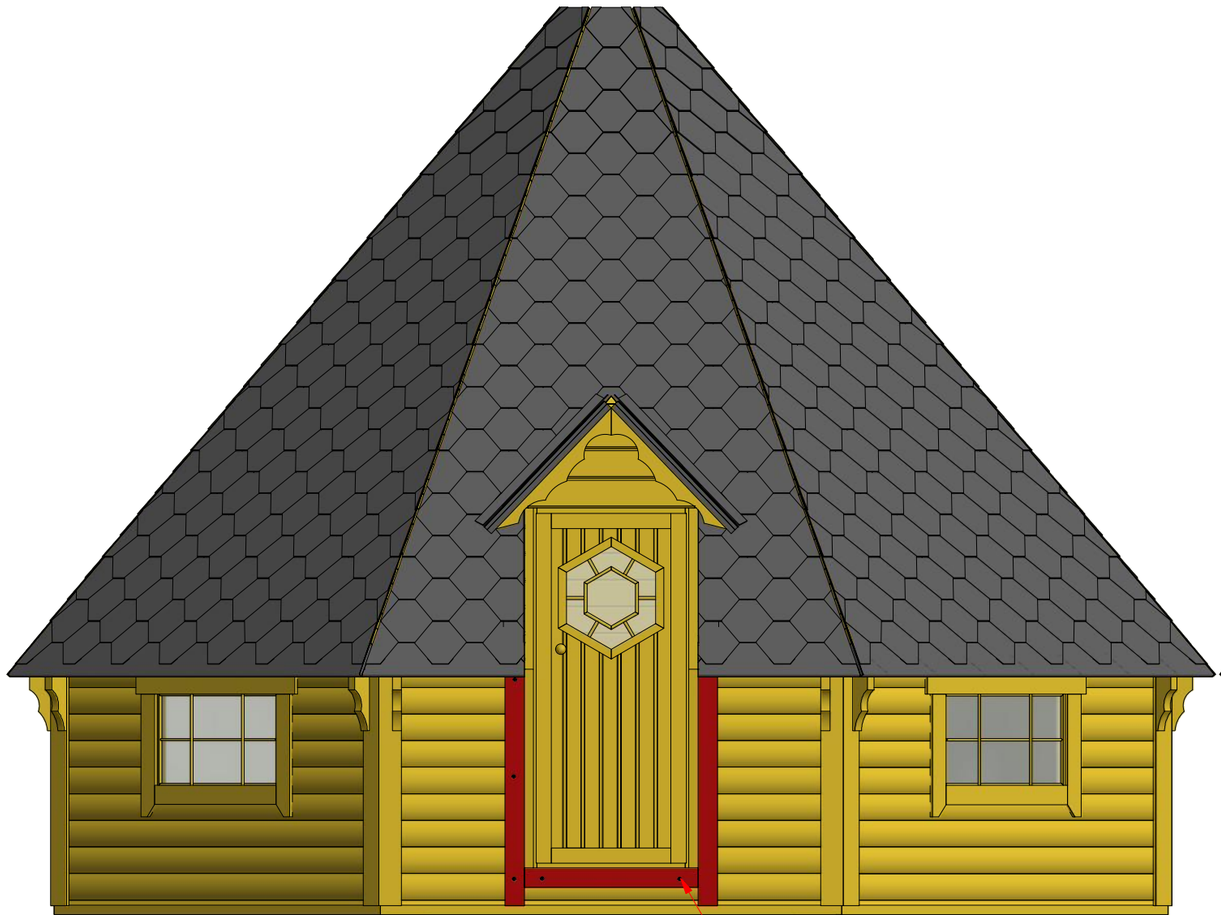



Grill cabin 25 m² with extension

Screws			
1	S1	4x70	4 pcs
2	V1	2.5x25	

